DeKalb County Historic Preservation Commission

Monday, April 21, 2024- 6:00 P.M.

Staff Report

Consent Agenda

C. 1723 Vickers Circle, Rosalie Ezekiel. Modify a previously approved COA to replace windows on a nonhistoric house. **1247497**

Built in 1960 - Nonhistoric (18 004 04 033)

This property is in the Chelsea Height Character Area but is not in a National Register Historic District.

10-02 1723 Vickers Circle (DH), Kim Hollis. Enclose screened porch on rear. **Approved.**
08-24 1723 Vickers Circle, Rosalie Ezekiel. Construct a second story addition. 1247162. **Approved.**

Summary

The applicant proposes modifying the window material and placement previously approved by the Historic Preservation Commission in August of 2024. The application approved in 2024 proposed wood or metal clad windows to install in the approved second story addition and to replace the existing windows on the original first story of the house. The applicant proposes modifying the approved window material to fiberglass for cost purposes.

In addition to modifying the window material, the applicant also proposes the following window placement modifications:

- Install a skylight. The skylight will be installed over the interior stairs, on the roof slope facing the rear of the house. The skylight will not be visible from the street.
- Modify the configuration of windows on the rear of the property. The two multi-pane fixed windows on the right side of the rear façade will be removed and replaced with two single pane fixed windows, one horizontal and the other vertical. Additionally, a floor to ceiling single-pane fixed window will be installed next to the existing floor to ceiling window and sliding glass doors. Lastly, horizontal transom windows will be installed above the set of four single pane fixed windows on the upper level of the rear elevation.

Recommendation

Approve. The proposed changes do not appear to have a substantial adverse effect on the property or the district. This application appears to meet the guidelines and the staff recommends approval.

Relevant Guidelines

5.0 *Design Review Objective* (p45) - When making a material change to a structure that is in view from a public right-of-way, a higher standard is required to ensure that design changes are compatible with the architectural style of the structure and retain character-defining features. When a proposed material change to a structure is not in view from the public-right-way, the Preservation Commission may review the project with a less strict standard so as to allow the owner more flexibility. Such changes, however, shall not have a substantial adverse effect on the overall architectural character of the structure.

11.0 *Nonhistoric Properties* (p93) Guideline - In reviewing an application for a Certificate of Appropriateness for a material change to a nonhistoric building, the Preservation Commission should evaluate the change for its potential impacts to

any historic development (architecture and natural and cultural landscapes) in the area of influence of the nonhistoric property. Guidelines presented in *Section 7.0: Additions and new Construction* are relevant to such evaluations.

Development Services Center
178 Sams Street
Decatur, GA 30030
www.dekalbcountyga.gov/planning
404-371-2155 (o); 404-371-4556 (f)

DeKalb County
GEORGIA

Chief Executive Officer
Michael Thurmond

DEPARTMENT OF PLANNING & SUSTAINABILITY

Interim Director
Cedric Hudson

Application for Certificate of Appropriateness

Date submitted: 3/18/25 Date Received: _____

Address of Subject Property: 1723 Vickers Circle

Applicant: Rosalie Ezekiel E-Mail: rosalie@ezekielarchitects.com

Applicant Mailing Address: 153 Greenwood Place, Decatur, GA 30030

Applicant Phone: 404-788-2135

Applicant's relationship to the owner: Owner ☐ Architect ☒ Contractor/Builder ☐ Other ☐

****

Owner(s): Richard Masta Email: rfmasta@gapac.com

Owner(s): Petra Masta Email: petra.sehnalikova@centrum.cz

Owner(s) Mailing Address: 1723 Vickers Circle, Decatur, GA 30030

Owner(s) Telephone Number: 404-545-7103

Approximate date of construction of the primary structure on the property and any other structures affected by this project: 1960

Nature of work (check all that apply):

New construction	☐	New Accessory Building	☐	Other Building Changes	☐
Demolition	☐	Landscaping	☐	Other Environmental Changes	☐
Addition	☑	Fence/Wall	☐	Other	☐
Moving a Building	☐	Sign Installation	☐		

Description of Work:

This is a request for a change in window material from a previously approved Certificate of Appropriateness from August 19th, 2024 hearing, case number 1247162. The new windows and window replacements were approved to be wood or metal clad wood. We request an approval for fiberglass for cost purposes(Marvin Ultrex or Andersen Fibrex). We have corrected the existing front elevation which mistakenly showed brick at the front door where there is existing siding. We have changed the rear window configuration slightly and have submitted that change. We have also added a small skylight over the stair that is on the roof slope that faces the rear of the house and will not be seen from the street. There are no other changes from the approved set of drawings.

This form must be completed in its entirety and be accompanied by supporting documents, such as plans, list of materials, color samples, photographs, etc. All documents should be in PDF format, except for photographs, which may be in JPEG format. Email the application and supporting material to plansustain@dekalbcountyga.gov and pvjennings@dekalbcountyga.gov. An incomplete application will not be accepted.

Signature of Applicant: Rosalie Ezekiel Digitally signed by Rosalie Ezekiel Date: 2025.03.20 06:48:03 -04'00'

DeKalb County
GEORGIA

DEPARTMENT OF PLANNING & SUSTAINABILITY

Authorization of a Second Party to Apply for a Certificate of Appropriateness

This form is required if the individual making the request is **not** the owner of the property.

I/ We: Richard and Petra Masta

being owner(s) of the property at: 1723 Vickers Circle

hereby delegate authority to: Rosalie Ezekiel, Ezekiel Architects

to file an application for a certificate of appropriateness in my/our behalf.

Signature of Owner(s): Richard Masta Digitally signed by Richard Masta Date: 2025.03.19 11:17:41 -04'00'

Date: 3/19/2025

Please review the following information

Approval of this Certificate of Appropriateness does not release the recipient from compliance with all other pertinent county, state, and federal regulations.

Before making any changes to your approved plans, contact the preservation planner (404/371- 2155). Some changes may fall within the scope of the existing approval, but others will require review by the preservation commission. If work is performed which is not in accordance with your certificate, a Stop Work Order may be issued.

If your project requires that the county issue a Certificate of Occupancy at the end of construction, an inspection may be made to verify that the work has been completed in accord with the Certificate of Appropriateness. If the work as completed is not the same as that approved in the Certificate of Appropriateness you will not receive a Certificate of Occupancy. You may also be subject to other penalties including fines and/or required demolition of the non-conforming work.

If you do not commence construction within twelve months of the date of approval, your Certificate of Appropriateness will become void and you will need to apply for a new certificate if you still intend to do the work.

DeKalb County
GEORGIA

DEPARTMENT OF PLANNING & SUSTAINABILITY

How to Obtain a Certificate of Appropriateness

1. Contact the DeKalb County Department of Planning and Sustainability for an application form. You may make your request by email plansustain@dekalbcountyga.gov AND pvjennings@dekalbcountyga.gov.

2. Complete and submit the application. Please provide as much supporting material as possible, (plans, material, color samples, photos, etc.). All documents must be in PDF format except for photographs, which may be in JPEG format. Applications are accepted for a 10-day period each month. See page 3 (HPC Calendar). Email the application and supporting documents to plansustain@dekalbcountyga.gov AND pvjennings@dekalbcountyga.gov. If all documents are not provided the application will not be complete and will not be accepted.

3. Once the application has been received, the Administrative Specialist for the Department of Planning and Sustainability will provide a sign template and instructions on how to post the required signage on the property at least ten days before the preservation commission meeting. If the applicant does not post the required signage and provide evidence of posting within ten days before the preservation commission meeting, their application may be deferred or denied due to improper public notification.

4. The Preservation Planner may visit the property as part of their review. The commission members may view the property from the right-of-way.

5. Applications will be reviewed by the DeKalb County Historic Preservation Commission at its monthly meeting. The Historic Preservation Commission meets on the third Monday at 6 p.m., via Zoom. In unusual circumstances meeting dates and location may be changed.

6. The Historic Preservation Commission may approve, approve with modifications or deny an application. The applicant or any affected person as defined by county code may appeal the decision to the DeKalb County Board of Commissioners. Please contact the Department of Planning and Sustainability if you wish to file an appeal. The Historic Preservation Commission is required to make a decision on an application within 45 days of the date of filing, although this time can be extended if the applicant agrees to a deferral.

7. Although not required, applicants are encouraged to attend the Historic Preservation Commission meetings. Applicants may make a presentation, but presentations are not required. The commissioners may have questions for the applicant.

8. Approval of a Certificate of Appropriateness does not release the recipient from compliance with all other county, state and federal regulations.

DeKalb County
GEORGIA

DEPARTMENT OF PLANNING & SUSTAINABILITY

Design Checklist for a Certificate of Appropriateness

This checklist was created to help applicants prepare a complete application. Omissions and inaccurate information can lead to deferrals and/or denials of applications. Please review the checklist with the project's architect, designer, or builder. All items will not be applicable to all projects. New construction will involve all categories. One copy of drawings at scale (plus nine reduced sets) should be submitted.

Please address questions regarding applicability to your project to the DeKalb County Preservation Planner at 404-687-3945, e-mail pvjennings@dekalbountyga.gov and rlbragg@dekalbcountyga.gov.

Applicants are also referred to the DeKalb County website, http://www.dekalbcountyga.gov/planning-and-sustainability/planning-sustainability.

I have reviewed the "Design Manual for the Druid Hills Local Historic District". Yes

I have reviewed the DeKalb County Tree Ordinance. Yes

I have reviewed applicable zoning codes regarding lot coverage, garage sizes, stream buffers. Yes

1. **General**
   a. Label all drawings with the address of the site, owners' name, and contact phone number.
   b. Number all drawings.
   c. Include a graphic scale on reductions.
   d. Date all revisions.
   e. Indicate all unverified numbers with +/- signs
   f. Include photos of the existing condition of the property.

2. **Site Plan** (existing and proposed) to include:
   a. Topographical plan with significant trees sized and located;
   b. Setback compared to adjacent houses (ask surveyor to show corners of adjacent houses);
   c. Distance between houses;
   d. Façade width to finished face of material;
   e. Grading and elevations across site;
   f. Dirt removal or regrading if more than 18";
   g. Tree protection plan;
   h. Tree removal and replacement plan

3. **Driveways and Walkways**
   a. Location and relationship to house;
   b. Width;
   c. Material;
   d. Curb cut and apron width

4. **Fences & Retaining Walls**
   a. Placement on lot;
   b. Height of fence or wall. If retaining wall, height on both sides;
   c. Material;
   d. Railing if necessary

5. **Elevations and Floor Plans:** <<Indicate all unverified numbers with +/- signs>>
   a. Plans for all floors (drawn to scale, ¼"=1' preferred);
   b. House orientation on site plan;
   c. Scalable elevations for front, rear, left, right;
   d. Height, grade to ridge;
   e. Streetscape comparison showing heights of two flanking houses on each side;
   f. Height from grade to first floor level at all four corners;
   g. Height from grade or finished floor line to eaves at all four corners;
   h. Ceiling heights of each floor, indicating if rough or finished;
   i. Height of space between the ceiling and finished floor above;
   j. Two people of 5'-6" and 6' height shown;
   k. Landscaping plan

6. **Additions**
   a. Placement shown on elevations and floor plan;
   b. Visibility from rights-of-way and paths;
   c. Photos of all facades;
   d. Design proportioned to main house;
   e. Landscaping plan;
   f. Materials and their combinations

7. **Roof Plan**
   a. Shape and pitch of roof;
   b. Roofing material;
   c. Overhang;
   d. Louvers and vents;
   e. Chimney height and material

8. **Dormers**
   a. Construction details provided;
   b. Shape and size of dormer (show dimensions on drawings);
   c. Overhang;
   d. Size of window(s), with nominal size of sash (show dimensions on drawings)

9. **Skylights**
   a. Profile;
   b. Visibility from right-of-way;
   c. Material (plastic lens or glass);
   d. Shown in plan and elevation to scale

10. Façade

a. Consistency in style;
b. Materials and their combinations
   brick size and color
   stone type and color
   fiber-cement (e.g., Hardie-plank) or wood siding
   shake or shingle
   other
c. Height of foundation at corners;
d. Ceiling heights comparable to area of influence: basement, first floor, second floor;
e. Detailing: soldier course, brackets, fascia board; water table;
f. Height from grade to roof ridge;
g. Dimensions, proportions and placement of windows, doors

11. Entrance

a. Height and width of door;
b. Design of door (e.g., 6-panel, craftsman);
c. Material of door;
d. Overhang;
e. Portico height;
f. Size and height of columns or posts;
g. Railing

12. Windows

a. Consistent with original as well as the area of influence;
b. Size and proportion similar to original;
c. Pane orientation and size similar to original;
d. Type (e.g., double hung, casement);
e. Fenestration on walls visible from right-of-way;
f. Simulated divided light (SDL) or true divided light (TDL): location of muntins between the glass, behind the glass or permanently affixed on exterior;
g. Material of window and any cladding;
h. Width of muntins compared to original (show dimensions on drawings);
i. Shutters or canopies
j. Dimensions of windows and doors.

13. Materials

a. Show all materials and label them on drawings;
b. Provide samples of brick or stone;
c. Provide samples if new or unusual materials

14. **Garages / Accessory Buildings**
    a. Visibility from street;
    b. Placement on site;
    c. Scale, style appropriate for house;
    d. Show dimensions on drawings;
    e. Materials;
    f. Square footage appropriate for lot size;
    g. Garage door size and design
    h. Show height from grade to eaves and to top of roof

15. **Demolitions**
    a. Provide documentation from engineer concerning feasibility of rehabilitation;
    b. Provide photographs of structure to be demolished;
    c. Provide plan for proposed redevelopment

Application Process Checklist

This checklist is to ensure that applicants understand the Certificate of Appropriateness (COA) application process from beginning to end. Please verify that you have read over the process shown below and understand the procedures and timeline that will be followed for all submitted COA applications.

- Applications may only be submitted during the period specified on the calendar for each month. Once the filing deadline has passed and that period has expired, **no new applications will be accepted** to be heard at that month's commission meeting. If an application has not been submitted before the filing deadline, it cannot be submitted again until the next period for applications has opened.
- Additional materials submitted after the staff's report have been finalized and posted to the public will not be taken into consideration for the staff report. Staff reports will not be edited once finalized and published – any new materials may be submitted for the record for the commission but will not affect the staff's report for the application.
- Any additional materials submitted after the staff's report has been finalized and posted to the public may be added to the record for the historic preservation commission to review as supplemental materials for the submitted application. Supplemental materials includes:
    - Representative photos
    - Letters of support/opposition
    - Architectural drawings
    - Updated site plans

  Supplemental materials **do not** include documents for new work to be added to the already submitted application. Any materials that propose new work that was not included in the original application, will not be added to the record. Any proposed new work that was not included in the original application will need to be included in a new application to be submitted for next month's commission meeting.

I have reviewed the information above and understand the Certificate of Appropriateness process. Yes

I have reviewed the HPC calendar. Yes

Masta Residence

1723 Vickers Circle, GEORGIA 30300

REVISED ISSUE FOR CERTIFICATE OF APPROPRIATENESS APPLICATION
April 21, 2025 HPC MEETING DATE

VICINITY PLAN

Project Site

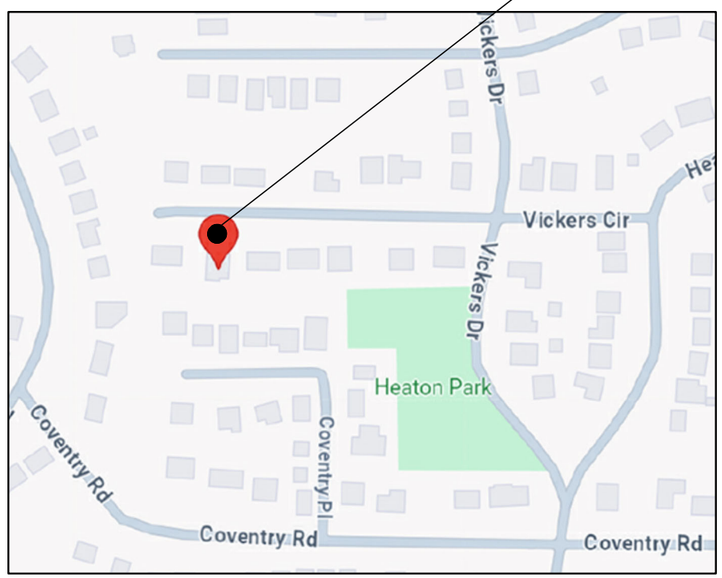

PROJECT DESCRIPTION

THIS APPLICATION REQUESTS APPROVAL FOR A CHANGE IN WINDOW MATERIAL FOR A PREVIOUSLY APPROVED PARTIAL SECOND FLOOR ADDITION WITH MINIMAL FIRST FLOOR RENOVATION CHANGES. NO CHANGES TO THE EXISTING HOUSE FOOTPRINT OR LOT.

LOT COVERAGE CALCULATIONS

EXISTING /PROPOSED (NO CHANGE)

HOUSE/CARPORT :	2,470sf
FRONT PORCH/STEPS	150sf
FRONT WALK	106sf
DRIVEWAY	1,782sf
REAR PATIO/STEPS	636sf
TOTAL:	5,144 sf

LOT COVERAGE EXISTING:
35%

NO TREES TO BE REMOVED

FAR CALCULATIONS

EXISTING		PROPOSED	
FIRST FLOOR	1,845sf	FIRST FLOOR	1,845sf
		SECOND FLOOR	960sf
TOTAL:	1,845 sf	TOTAL:	2,805 sf

FAR EXISTING:
12.8%

FAR PROPOSED:
19.4%

DRAWING LIST

A-00 COVER SHEET, NOTES
SURVEY
A-1 SITE PLAN, EXISTING/PROPOSED
A-2 FIRST FLOOR PLAN, EXISTING
A-3 FIRST FLOOR PLAN, PROPOSED
A-4 SECOND FLOOR PLAN, PROPOSED
A-5 ROOF PLAN, EXISTING
A-6 ROOF PLAN, PROPOSED
A-7 FRONT ELEVATIONS
A-8 SIDE ELEVATIONS, WEST SIDE
A-9 SIDE ELEVATIONS, EAST SIDE
A-10 REAR ELEVATIONS
A-11 BUILDING SECTIONS

ZONING INFORMATION

DISTRICT: 18
COUNTY : DEKALB
LOT SIZE: .33Acres / 14,395sf
R75
FRONT YARD SETBACK: 35'
SIDE YARD SETBACK: 7.5'
REAR YARD SETBACK: 40'

PARCEL ID: 18 004 04 033
LANDLOT: 004

DRUID HILLS HISTORIC /CHELSEA HEIGHTS SUBDIVISION

LOT COVERAGE 35% ALLOWABLE
FLOOR AREA RATIO(FAR): 35% MAX

CERTIFICATE OF APPROPRIATENESS

1 APPROVED, AUGUST 19, 2024

EZEKIEL ARCHITECTS, PC
153 Greenwood Place
Decatur, GA 30030
T: 404.788.2135
rosalie@ezekielarchitects.com

Date	Revision
07/18/24	Cert. of Appropriateness
03/18/25	REVISED FOR Cert. of Appropriateness

NOT FOR CONSTRUCTION

STATE OF GEORGIA
ROSALIE EZEKIEL
CERTIFICATE NO. 011904
REGISTERED ARCHITECT

Masta Residence
1723 Vickers Circle
Decatur, GA

Date 07/18/24
Scale As Noted

COVER SHEET NOTES

A-0

NOTES:

THE FIELD DATA UPON WHICH THIS PLAT IS BASED HAS NOT BEEN ADJUSTED. EQUIPMENT USED WAS A TRIMBLE S6 ROBOTIC.
FIELD DATE: 12/8/23

THIS PLAT HAS BEEN CALCULATED FOR A CLOSURE AND IS FOUND TO BE ACCURATE WITHIN ONE FOOT IN 108,450 FEET.

THIS PLAT WAS PREPARED WITHOUT THE BENEFIT OF A TITLE REPORT.

THIS PLAT IS FOR THE EXCLUSIVE USE OF THE PARTY OR PARTIES, SHOWN HEREON, AND IS NOT INTENDED FOR ANY OTHER THIRD PARTY.

THIS SURVEY IS SUBJECT TO ALL RIGHTS-OF-WAY, BUFFERS, AND EASEMENTS SHOWN OR NOT SHOWN.

NO PORTION OF THIS PROPERTY IS IN A FLOOD ZONE AS PER DEKALB COUNTY FIRM PANEL 13089C0062K LAST REVISED AUGUST 15, 2019.

ZONING : R-75
TAX MAP PARCEL
#18 004 04 033

MAX COVERAGE : 35%

FRONT SETBACK - 35'
SIDE SETBACK - 7.5'
REAR - 40'

EXISTING LOT COVERAGE:

HOUSE/CARPORT - 2,470 SF
FRONT PORCH/STEPS - 150
WALK - 106 SF
REAR PATIO/STEPS - 636 SF
DRIVEWAY - 1,782 SF
TOTAL - 5,144 SF

TOTAL LOT COVERAGE :
5,144/14,395 = 35%

ADDRESS: 1723 VICKERS CIRCLE
DECATUR, GA 30030

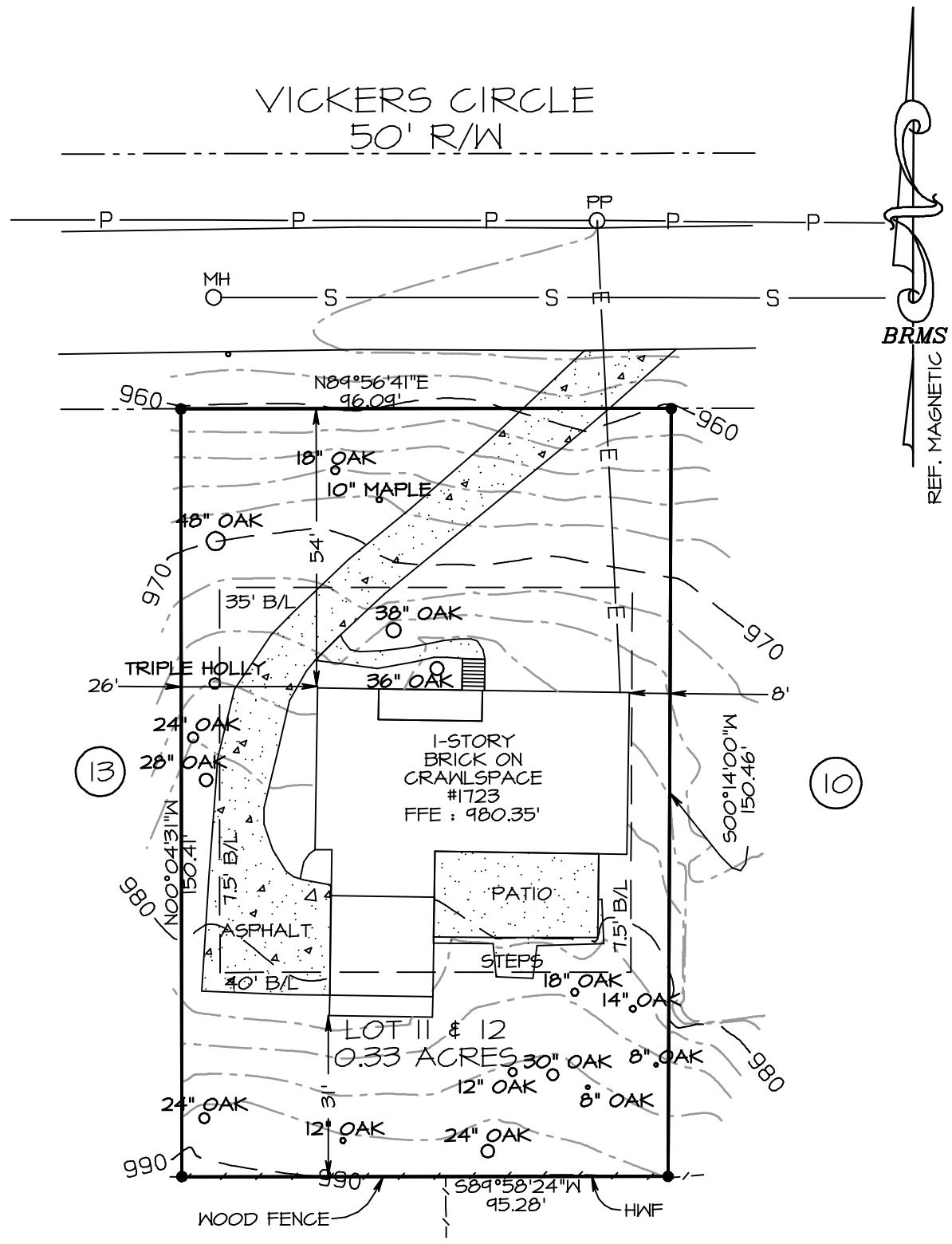

GRAPHIC SCALE 1"=30'

30 0 30 60 90

LEGEND

BL	-	BUILDING LINE
CBX	-	CABLE TV BOX
CB	-	CATCH BASIN
C/G	-	CURB & GUTTER
℄	-	CENTER LINE
CLF	-	CHAIN LINK FENCE
CC	-	CONCRETE
DB,PG	-	DEED BOOK, PAGE
EP	-	EDGE OF PAVEMENT
FH	-	FIRE HYDRANT
GW	-	GUY WIRE
HWF	-	HOG WIRE FENCE
IPS	-	IRON PIN SET-1/2"REBAR
LP	-	PROPANE TANK
LL	-	LAND LOT
LLC	-	LAND LOT CORNER
LLL	-	LAND LOT LINE
MH	-	MAN HOLE
N/F	-	NOW OR FORMERLY
PB, PG	-	PLAT BOOK, PAGE
POB	-	POINT OF BEGINNING
TPOB	-	TRUE POINT OF BEGINNING
-P-	-	OVER HEAD POWER
PL	-	PROPERTY LINE
PP	-	POWER POLE
RBF	-	REBAR FOUND
R/W	-	RIGHT-OF-WAY
WM	-	WATER METER

SURVEYOR'S CERTIFICATION

This plat is a retracement of an existing parcel or parcels of land and does not subdivide or create a new parcel or make any changes to any real property boundaries. The recording information of the documents, maps, plats, or other instruments which created the parcel or parcels are stated hereon. RECORDATION OF THIS PLAT DOES NOT IMPLY APPROVAL OF ANY LOCAL JURISDICTION, AVAILABILITY OF PERMITS, COMPLIANCE WITH LOCAL REGULATIONS OR REQUIREMENTS, OR SUITABILITY FOR ANY USE OR PURPOSE OF THE LAND. Furthermore, the undersigned land surveyor certifies that this plat complies with the minimum technical standards for property surveys in Georgia as set forth in the rules and regulations of the Georgia Board of Registration for Professional Engineers and Land Surveyors and as set forth in O.C.G.A. Section 15-6-67.

GEORGIA REGISTERED NO. 3007 LAND SURVEYOR J. JASON HENSON

J. JASON HENSON / GA. RLS #3007 — 12-8-23 DATE

SHEET 1 OF 1

PROJ NAME:
RICK MASTA

DATE: 12/8/23
SCALE: 1" = 30'
SURVEYED: BB
DRAWN: BRB
CHECKED: JJH
APPROVED: JJH

SURVEY FOR:
RICHARD F.
MASTA
BEING LOTS 11 & 12
BLOCK 10
OF CHELSEA HEIGHTS SUBD.
LOCATED IN LAND LOT 4,
18th DISTRICT
DEKALB COUNTY, GEORGIA

Blue Ridge
Mountain
Surveying
PO BOX 893
BLAIRSVILLE, GA 30514
706.897.7900
BRMS

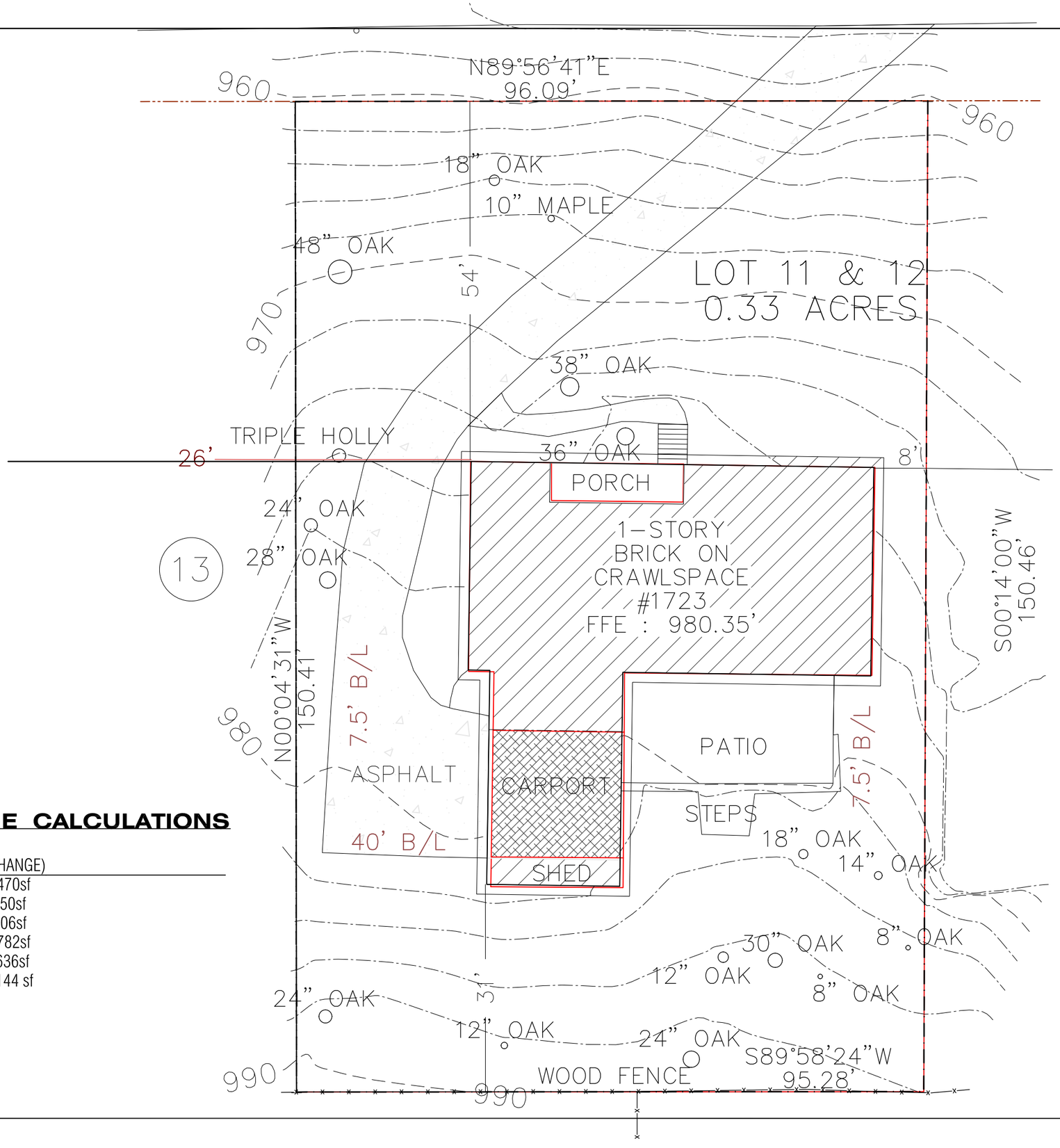

FOOTPRINT OR LOT.

LOT COVERAGE CALCULATIONS

EXISTING /PROPOSED (NO CHANGE)

HOUSE/CARPORT :	2,470sf
FRONT PORCH/STEPS	150sf
FRONT WALK	106sf
DRIVEWAY	1,782sf
REAR PATIO/STEPS	636sf
TOTAL:	5,144 sf

LOT COVERAGE EXISTING:
35%

NO TREES TO BE REMOVED

EZEKIEL ARCHITECTS, PC
153 Greenwood Place
Decatur, GA 30030
T: 404.788.2135
rosalie@ezekielarchitects.com

Date	Revision
07/18/24	Cert. of Appropriateness

NOT FOR CONSTRUCTION

STATE OF GEORGIA
ROSALIE EZEKIEL
CERTIFICATE NO. 011904
REGISTERED ARCHITECT

Masta Residence
1723 Vickers Circle
Decatur, GA

Date 07/18/24
Scale As Noted

SITE PLAN EXISTING/PROPOSED

A-1

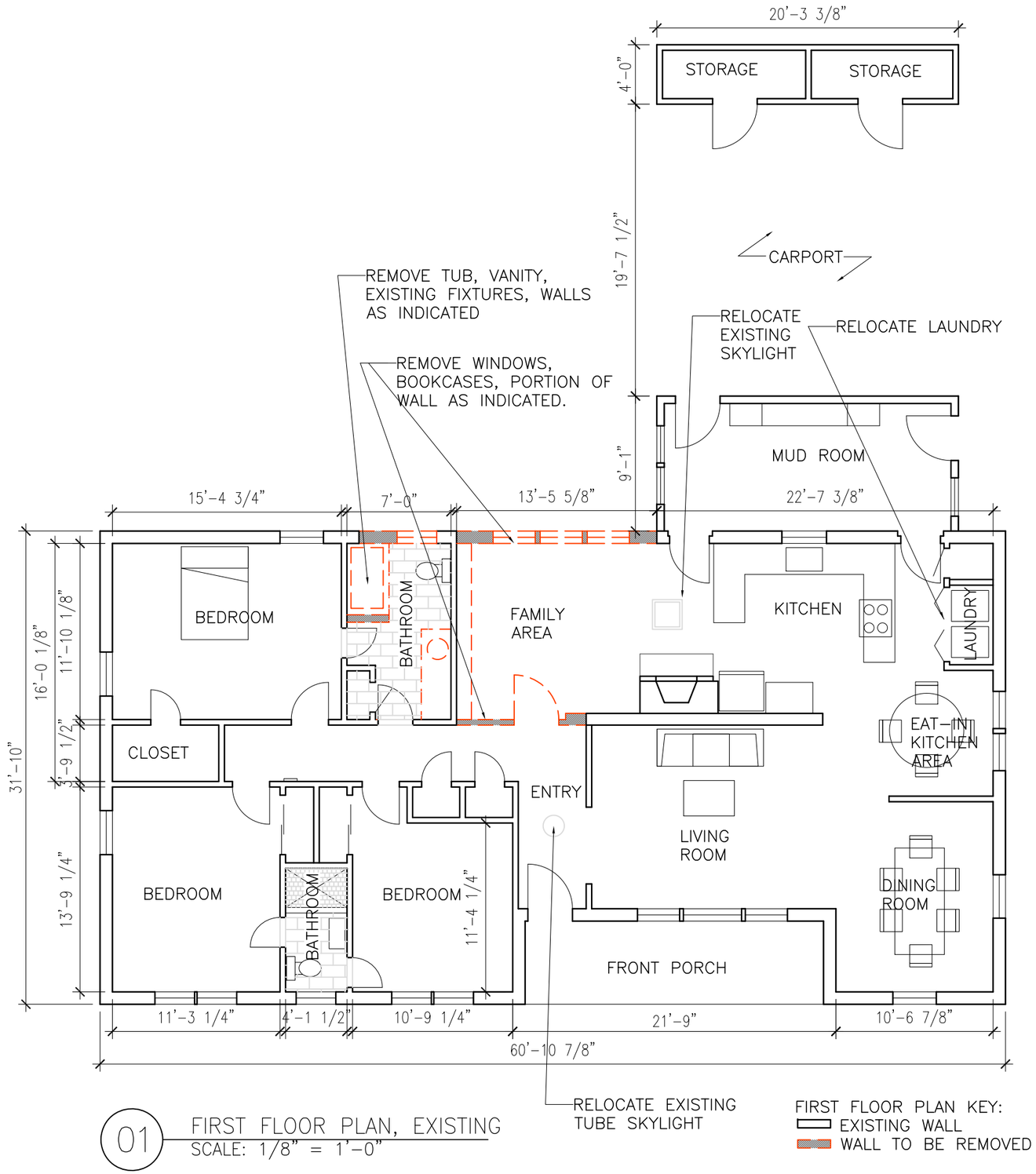

01 FIRST FLOOR PLAN, EXISTING
SCALE: 1/8" = 1'-0"

EZEKIEL ARCHITECTS, PC
153 Greenwood Place
Decatur, GA 30030
T: 404.788.2135
rosalie@ezekielarchitects.com

Date	Revision
07/18/24	Cert. of Appropriateness

NOT FOR CONSTRUCTION

STATE OF GEORGIA
ROSALIE EZEKIEL
CERTIFICATE NO. 011904
REGISTERED ARCHITECT

Masta Residence
1723 Vickers Circle
Decatur, GA

Date 07/18/24
Scale As Noted

FIRST FLOOR PLAN EXISTING

A-2

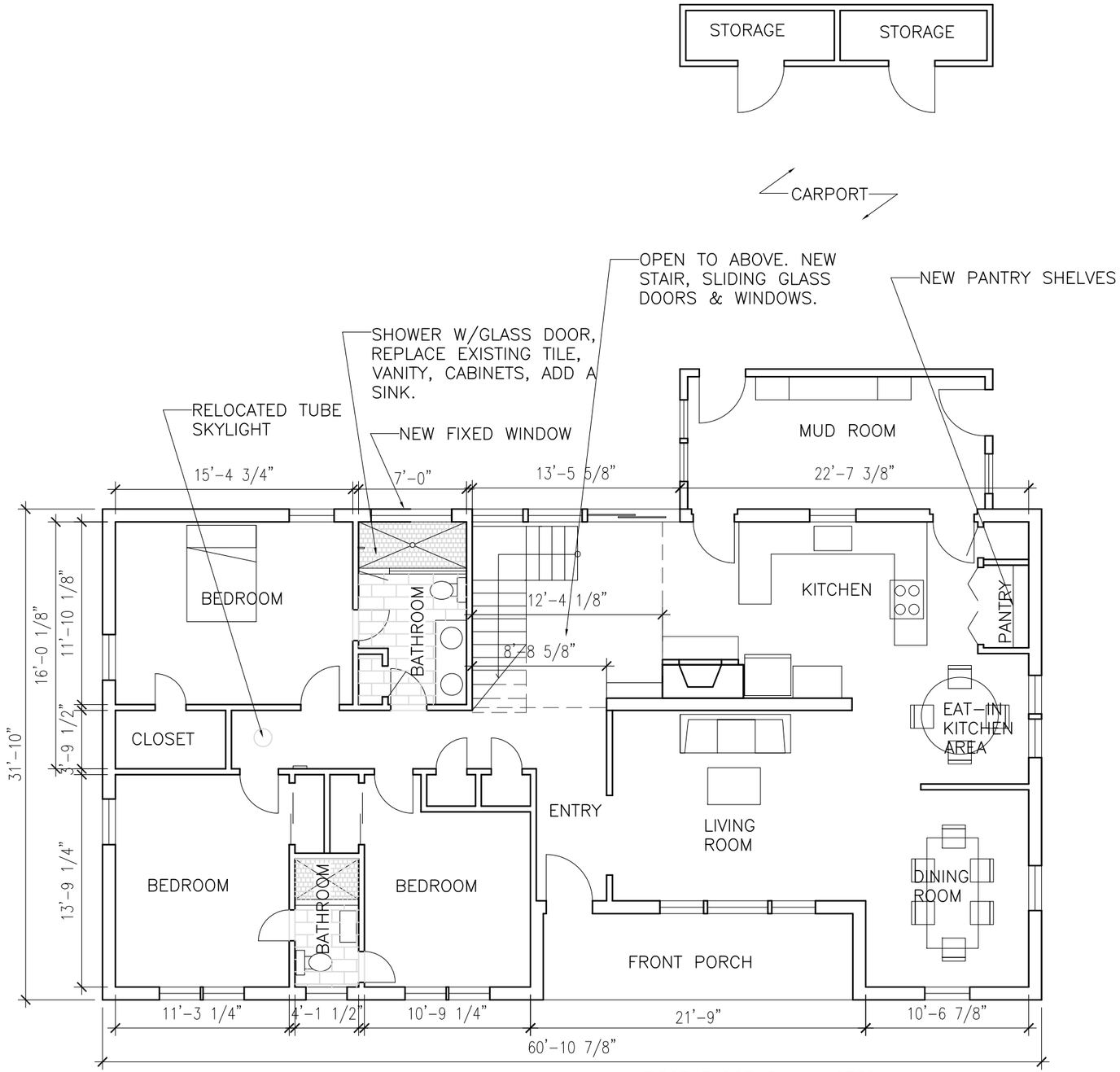

01 FIRST FLOOR PLAN, PROPOSED
SCALE: 1/8" = 1'-0"

FIRST FLOOR PLAN KEY:
EXISTING WALL
WALL TO BE REMOVED

FIRST FLOOR PLAN NOTES:
1. EXISTING WINDOWS:
REPLACE ALL EXISTING WINDOWS IN EXISTING LOCATIONS U.O.N.
2. PAINT ALL EXTERIOR BRICK
3. EXISTING ROOF TO REMAIN AS INDICATED IN THE ELEVATIONS.
4. EXISTING CEILING TO REMAIN EXCEPT AT STAIR OPENING.

N

EZEKIEL ARCHITECTS, PC
153 Greenwood Place
Decatur, GA 30030
T: 404.788.2135
rosalie@ezekielarchitects.com

Date	Revision
07/18/24	Cert. of Appropriateness

NOT FOR CONSTRUCTION

STATE OF GEORGIA
ROSALIE EZEKIEL
CERTIFICATE NO. 011904
REGISTERED ARCHITECT

Masta Residence
1723 Vickers Circle
Decatur, GA

Date 07/18/24
Scale As Noted

FIRST FLOOR PLAN PROPOSED

A-3

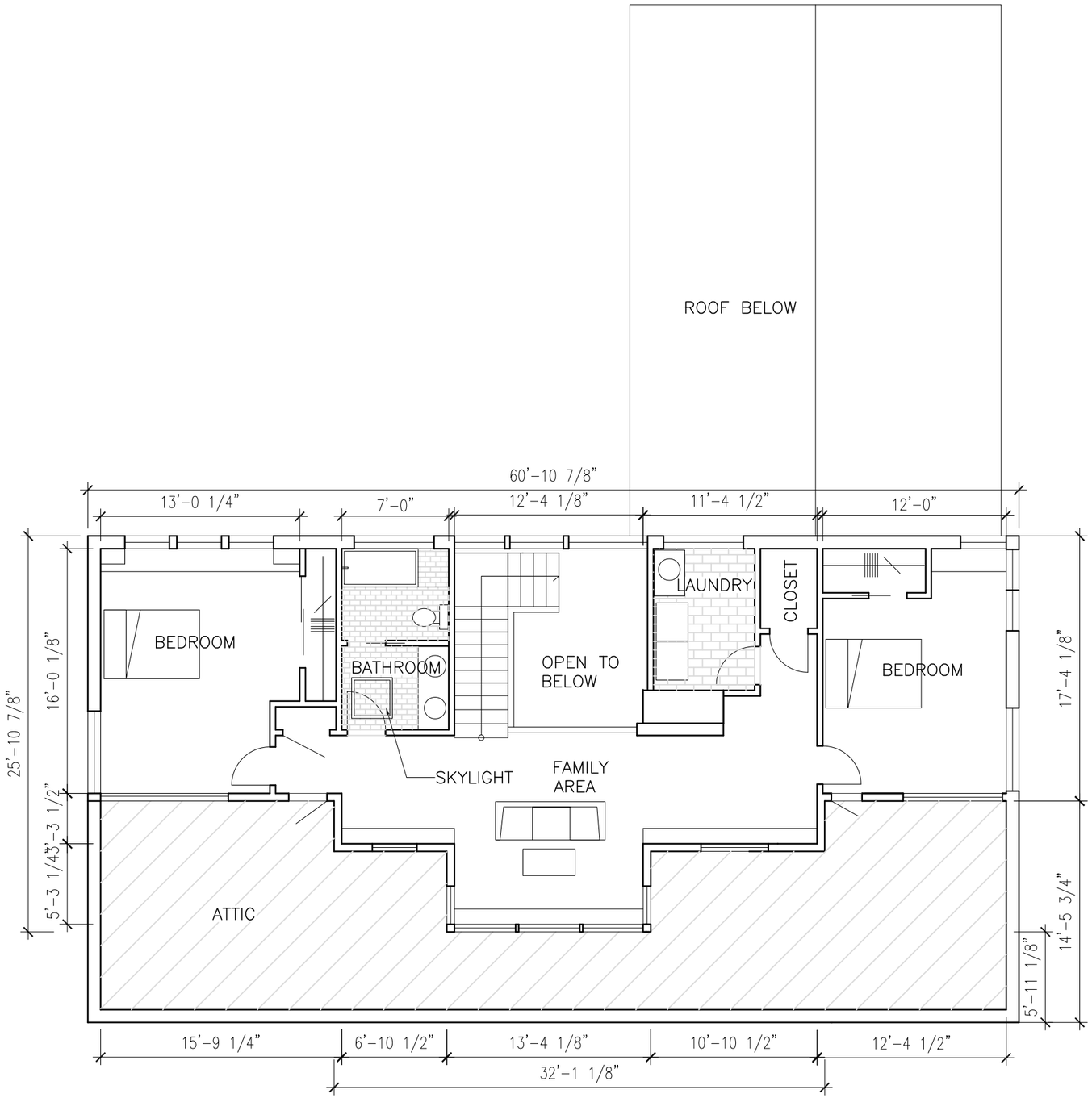

01 SECOND FLOOR PLAN, PROPOSED
SCALE: 1/8" = 1'-0"

N

EZEKIEL ARCHITECTS, PC
153 Greenwood Place
Decatur, GA 30030
T: 404.788.2135
rosalie@ezekielarchitects.com

Date	Revision
07/18/24	Cert. of Appropriateness

NOT FOR CONSTRUCTION

STATE OF GEORGIA
ROSALIE EZEKIEL
CERTIFICATE NO. 011904
REGISTERED ARCHITECT

Masta Residence
1723 Vickers Circle
Decatur, GA

Date 07/18/24
Scale As Noted

SECOND FLOOR PLAN PROPOSED

A-4

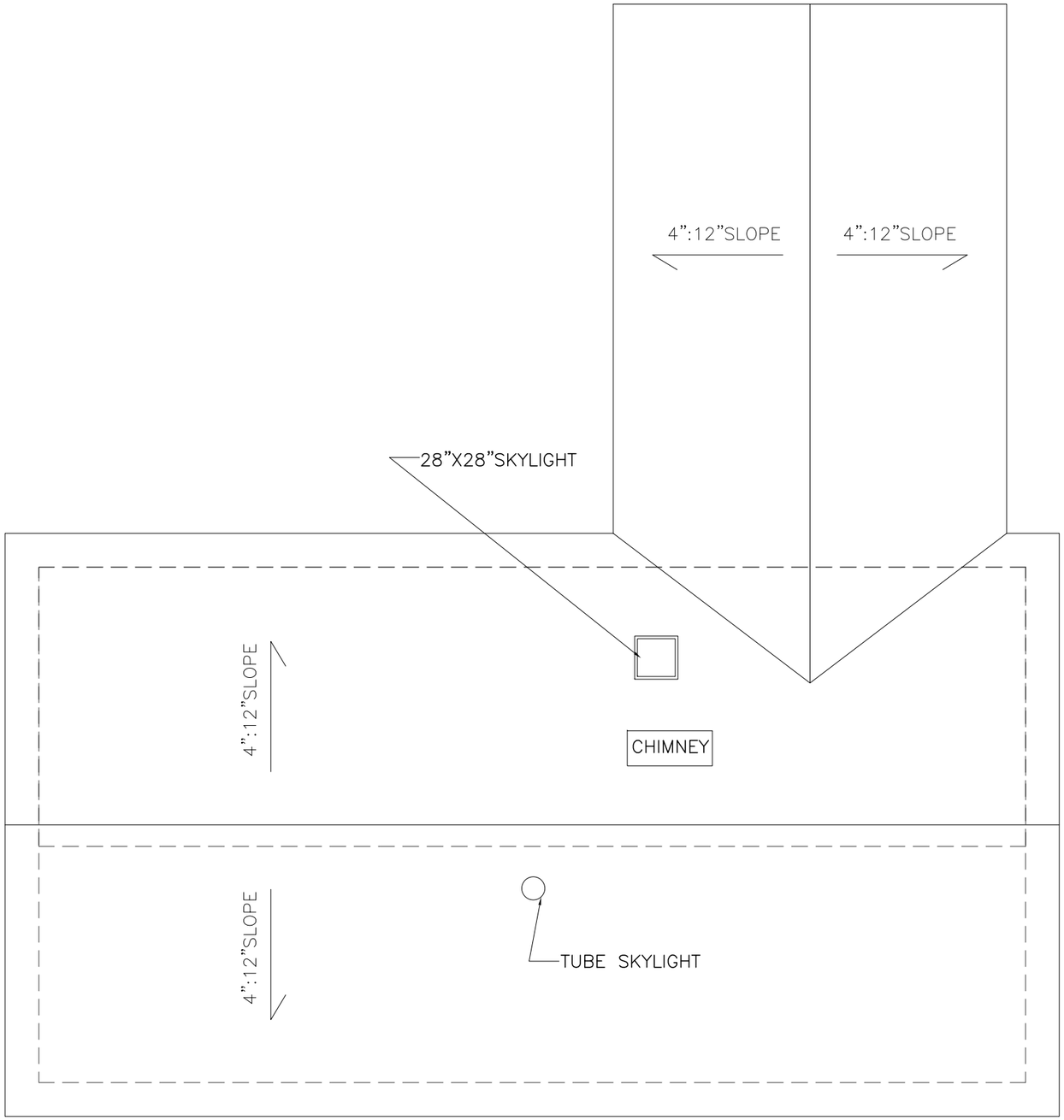

01 ROOF PLAN: EXISTING
SCALE: 1/8" = 1'-0"

N

EZEKIEL ARCHITECTS, PC
153 Greenwood Place
Decatur, GA 30030
T: 404.788.2135
rosalie@ezekielarchitects.com

Date	Revision
07/18/24	Cert. of Appropriateness

NOT FOR CONSTRUCTION

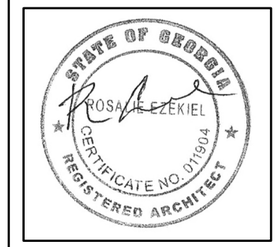

Masta Residence
1723 Vickers Circle
Decatur, GA

Date 07/18/24
Scale As Noted

ROOF PLAN EXISTING

A-5

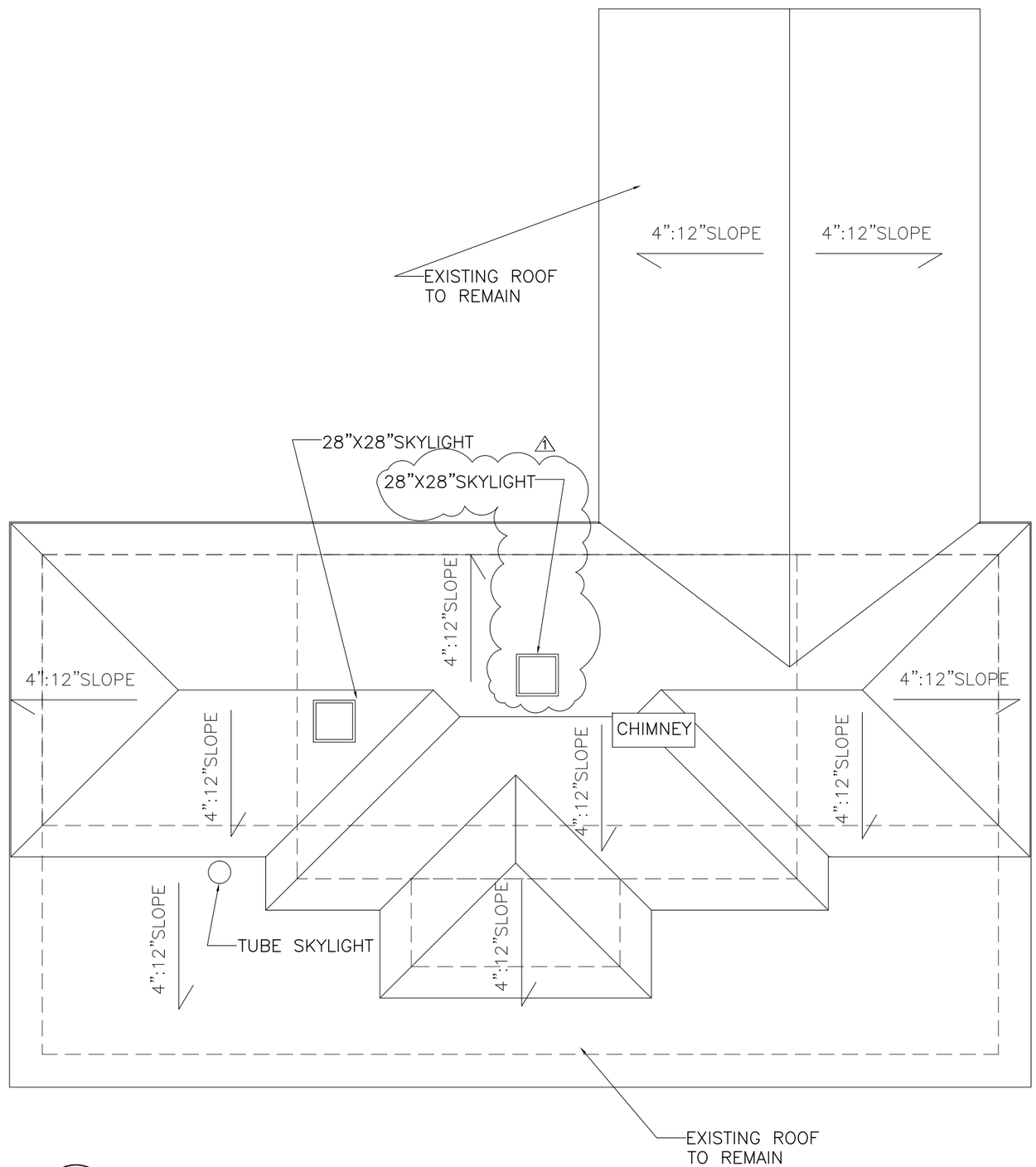

01 ROOF PLAN: PROPOSED
SCALE: 1/8" = 1'-0"

N

EZEKIEL ARCHITECTS, PC
153 Greenwood Place
Decatur, GA 30030
T: 404.788.2135
rosalie@ezekielarchitects.com

Date	Revision
07/18/24	Cert. of Appropriateness
1 03/18/25	REVISED FOR Cert. of Appropriateness

NOT FOR CONSTRUCTION

STATE OF GEORGIA
ROSALIE EZEKIEL
CERTIFICATE NO. 011904
REGISTERED ARCHITECT

Masta Residence
1723 Vickers Circle
Decatur, GA

Date 07/18/24

Scale As Noted

ROOF PLAN PROPOSED

A-6

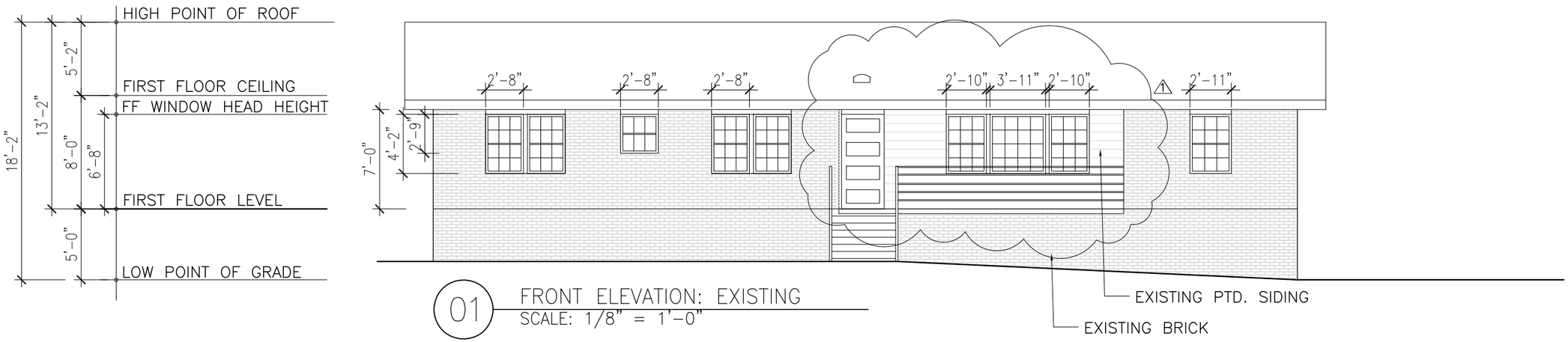

01 FRONT ELEVATION: EXISTING
SCALE: 1/8" = 1'-0"

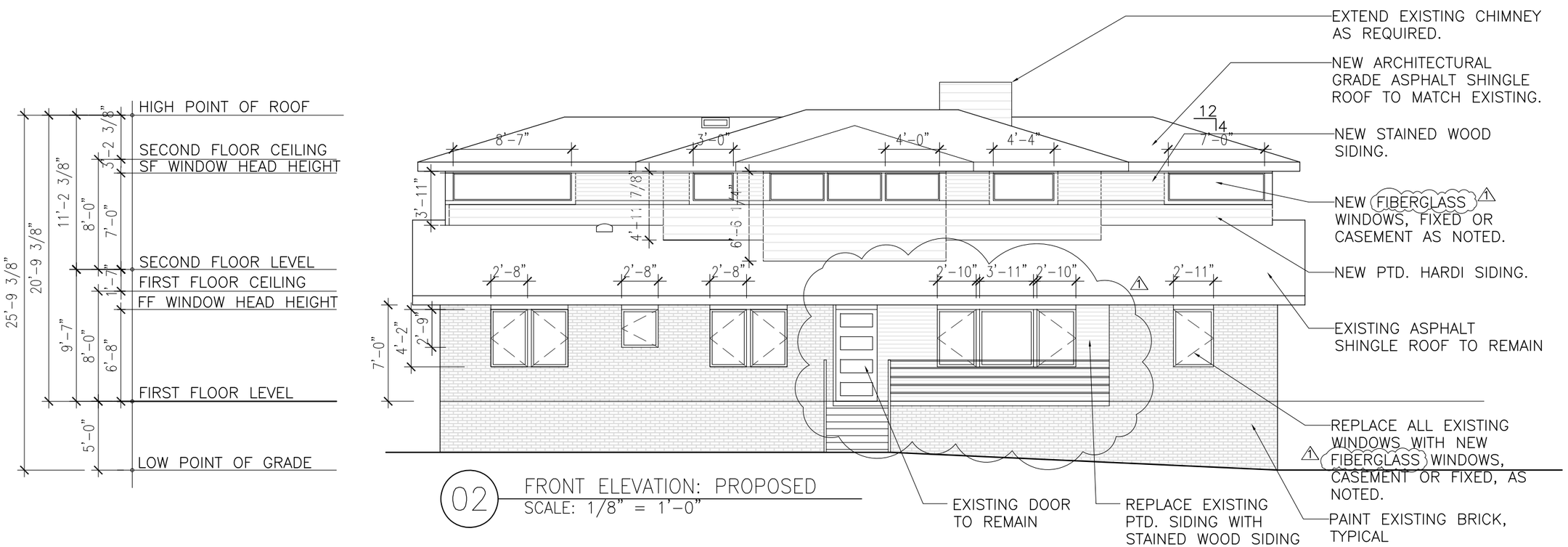

02 FRONT ELEVATION: PROPOSED
SCALE: 1/8" = 1'-0"

EZEKIEL ARCHITECTS, PC
153 Greenwood Place
Decatur, GA 30030
T: 404.788.2135
rosalie@ezekielarchitects.com

Date	Revision
07/18/24	Cert. of Appropriateness
03/18/25	REVISED FOR Cert. of Appropriateness

NOT FOR CONSTRUCTION

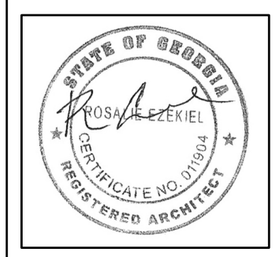

Masta Residence
1723 Vickers Circle
Decatur, GA

Date 07/18/24
Scale As Noted

FRONT ELEVATIONS

A-7

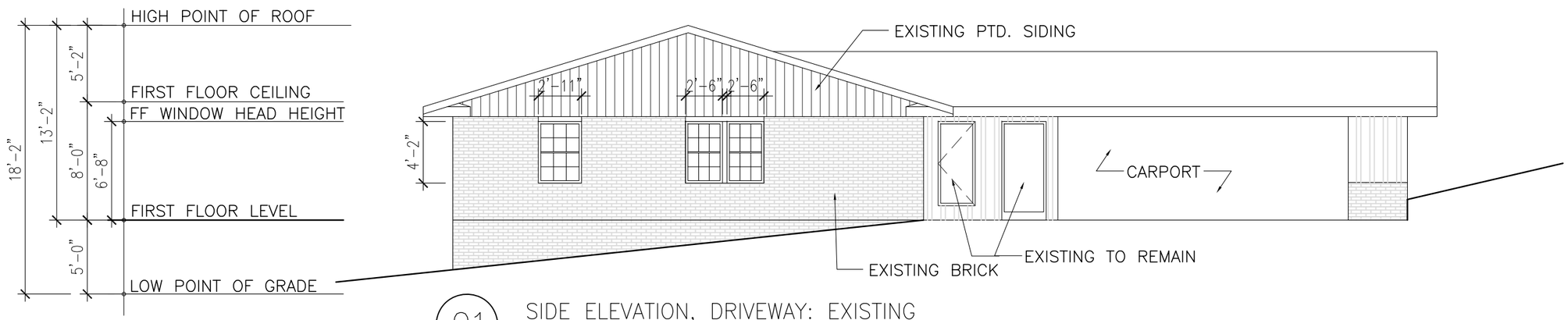

01 SIDE ELEVATION, DRIVEWAY: EXISTING
SCALE: 1/8" = 1'-0"

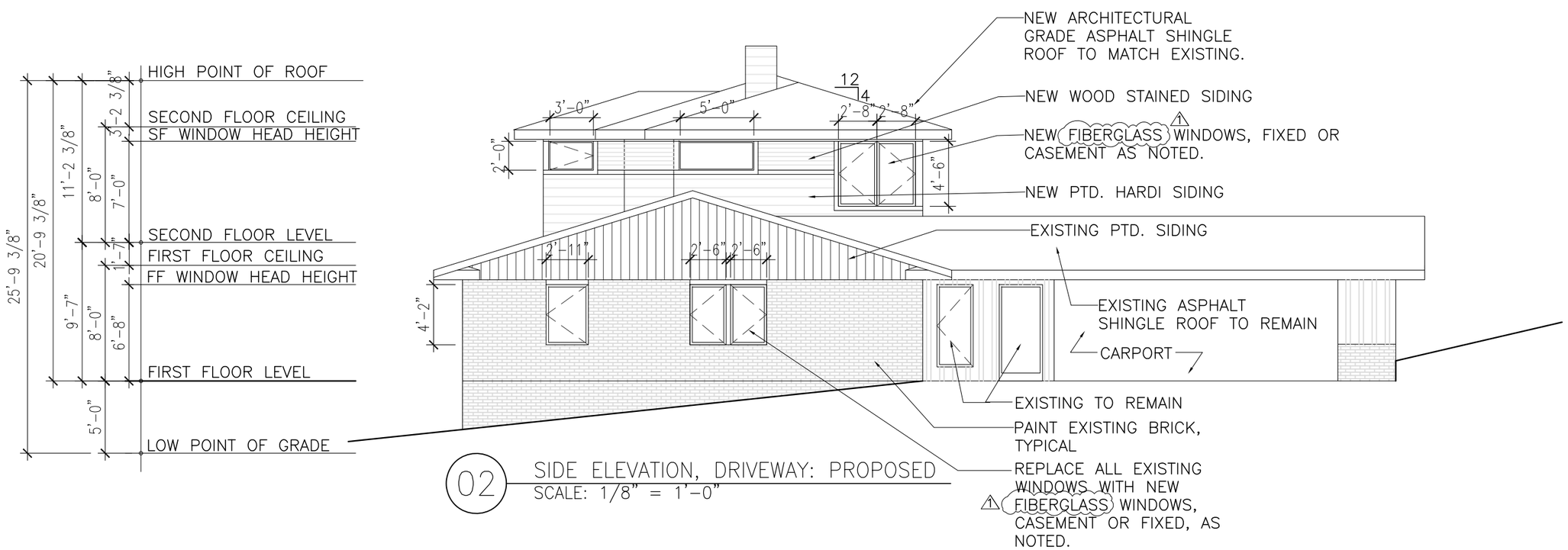

02 SIDE ELEVATION, DRIVEWAY: PROPOSED
SCALE: 1/8" = 1'-0"

EZEKIEL ARCHITECTS, PC
153 Greenwood Place
Decatur, GA 30030
T: 404.788.2135
rosalie@ezekielarchitects.com

Date	Revision
07/18/24	Cert. of Appropriateness
03/18/25	REVISED FOR Cert. of Appropriateness

NOT FOR CONSTRUCTION

STATE OF GEORGIA
ROSALIE EZEKIEL
CERTIFICATE NO. 011904
REGISTERED ARCHITECT

Masta Residence
1723 Vickers Circle
Decatur, GA

Date 07/18/24
Scale As Noted

SIDE ELEVATIONS WEST SIDE

A-8

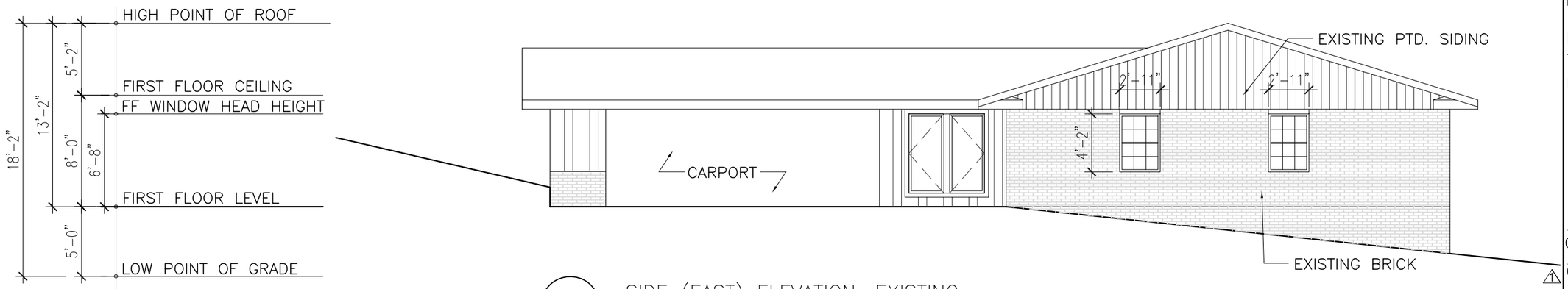

01 SIDE (EAST) ELEVATION: EXISTING
SCALE: 1/8" = 1'-0"

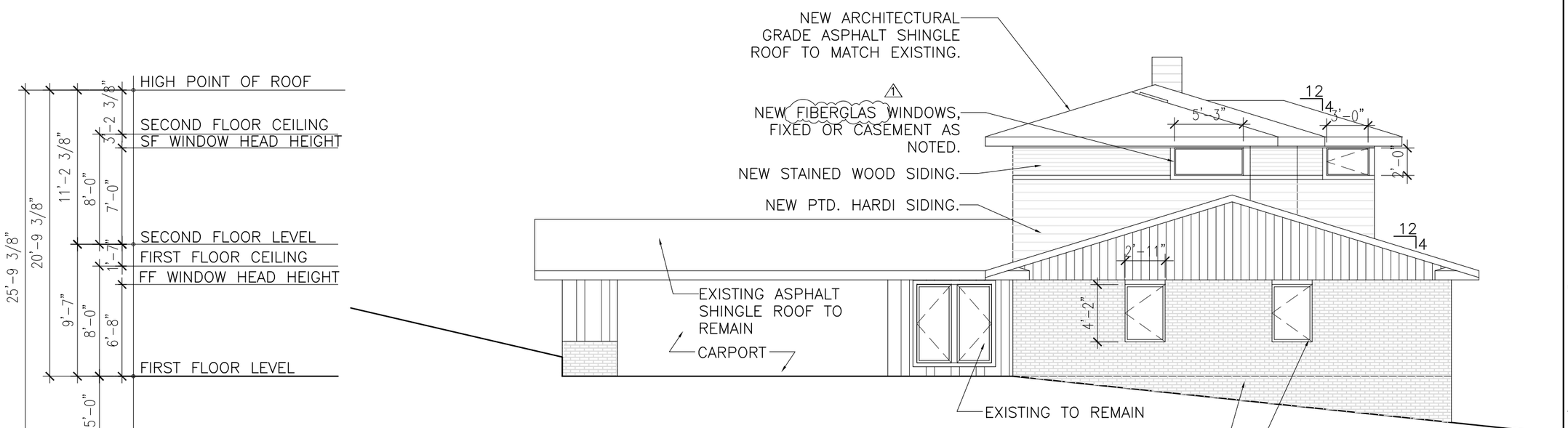

02 SIDE (EAST) ELEVATION: PROPOSED
SCALE: 1/8" = 1'-0"

EZEKIEL ARCHITECTS, PC
153 Greenwood Place
Decatur, GA 30030
T: 404.788.2135
rosalie@ezekielarchitects.com

Date	Revision
07/18/24	Cert. of Appropriateness
03/18/25	REVISED FOR Cert. of Appropriateness

NOT FOR CONSTRUCTION

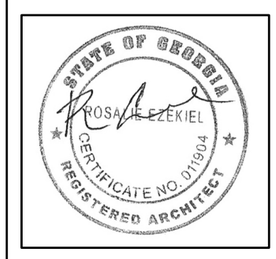

Masta Residence
1723 Vickers Circle
Decatur, GA

Date 07/18/24
Scale As Noted

SIDE ELEVATIONS EAST SIDE

A-9

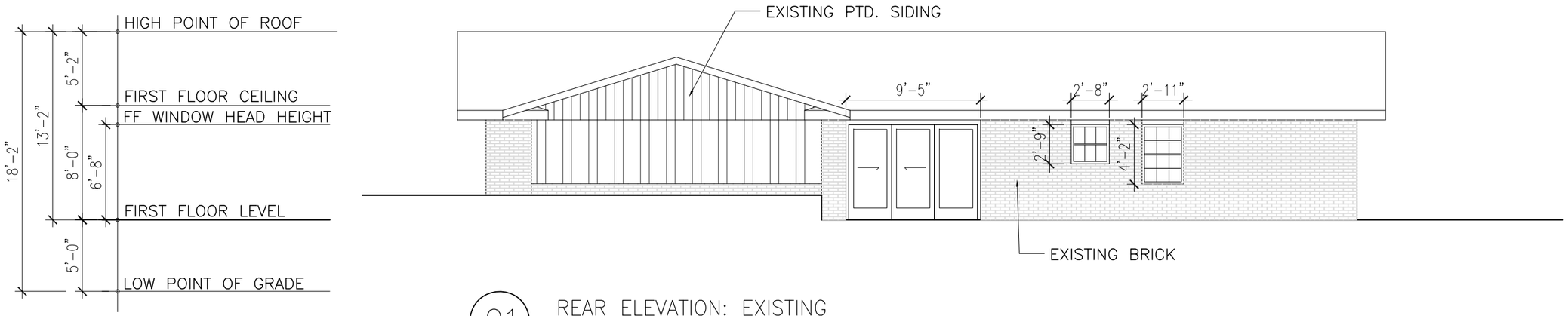

01 REAR ELEVATION: EXISTING
SCALE: 1/8" = 1'-0"

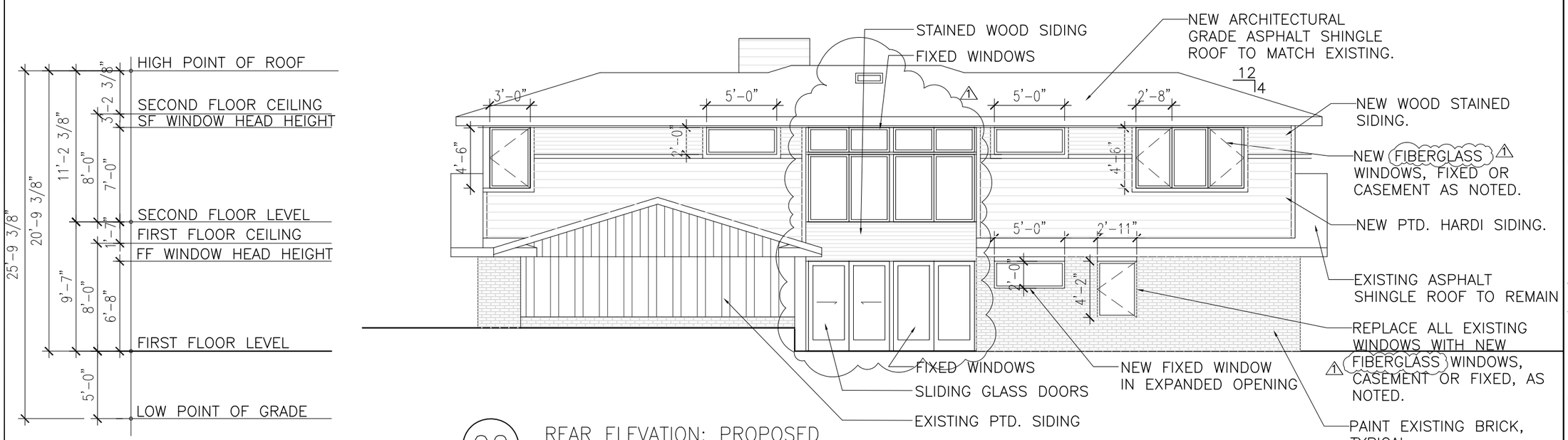

02 REAR ELEVATION: PROPOSED
SCALE: 1/8" = 1'-0"

EZEKIEL ARCHITECTS, PC
153 Greenwood Place
Decatur, GA 30030
T: 404.788.2135
rosalie@ezekielarchitects.com

Date	Revision
07/18/24	Cert. of Appropriateness
03/18/25	REVISED FOR Cert. of Appropriateness

NOT FOR CONSTRUCTION

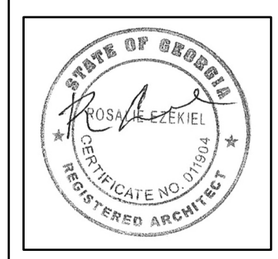

Masta Residence
1723 Vickers Circle
Decatur, GA

Date 07/18/24
Scale As Noted

REAR ELEVATIONS

A-10

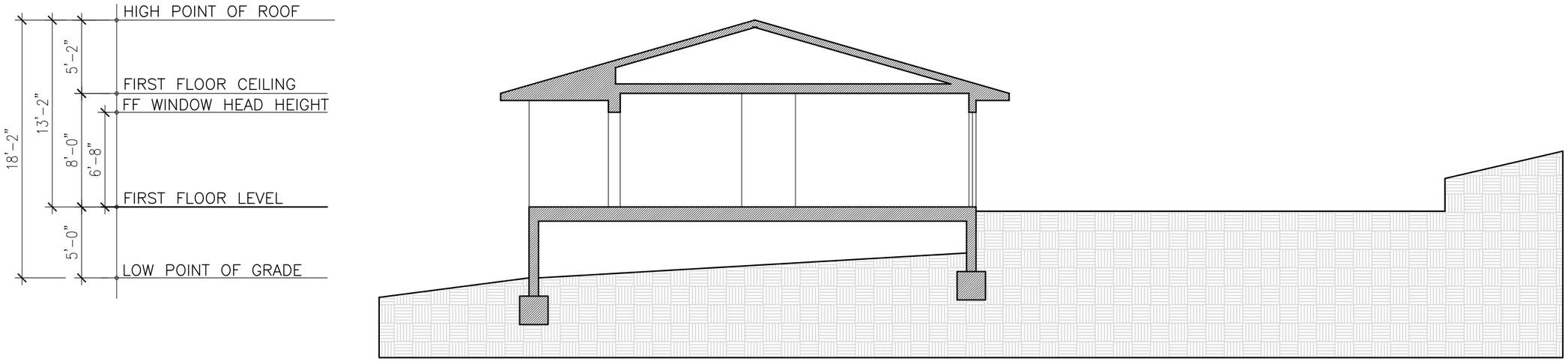

01 BUILDING SECTION, EXISTING
SCALE: 1/8" = 1'-0"

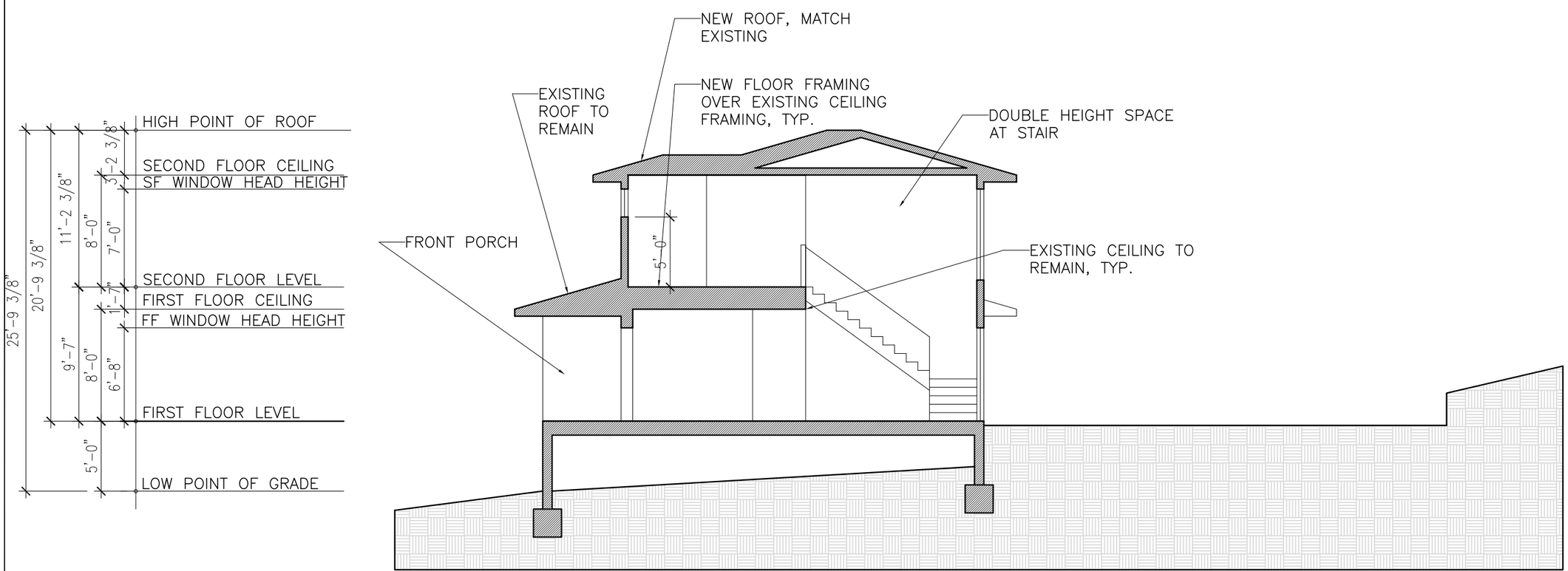

02 BUILDING SECTION, PROPOSED
SCALE: 1/8" = 1'-0"

EZEKIEL ARCHITECTS, PC
153 Greenwood Place
Decatur, GA 30030
T: 404.788.2135
rosalie@ezekielarchitects.com

Date	Revision
07/18/24	Cert. of Appropriateness

NOT FOR CONSTRUCTION

STATE OF GEORGIA
ROSALIE EZEKIEL
CERTIFICATE NO. 011904
REGISTERED ARCHITECT

Masta Residence
1723 Vickers Circle
Decatur, GA

Date 07/18/24
Scale As Noted

BUILDING SECTIONS

A-11

1723

From: Rosalie Ezekiel
To: Paige V. Jennings
Subject: Re: Questions Regarding Application for 1723 Vickers Circle
Date: Tuesday, April 8, 2025 3:16:07 PM
Attachments: Rear Elevation Revised.pdf
Rear Elevation Original.pdf

** **WARNING:** The sender of this email could not be validated and may not match the person in the "From" field. **

Hi Paige,
Thank you for your question. It is a very minor change. The second floor windows on the rear elevation were previously approved as four fixed windows and the revised version has divided each window so that it has a shorter window and a transom above. I have attached the sheets from the drawing set. "Rear Elevation Original" shows the rear elevation from the original set of drawings that were approved. "Rear Elevation Revised" shows the revised elevation with the transom glass change.

Please let me know if you have any questions or require any additional information.
Thanks,
Rosalie

On Tue, Apr 8, 2025 at 1:36 PM Paige V. Jennings <pvjennings@dekalbcountyga.gov> wrote:

> Good Afternoon,
>
> Hope that this email finds you well!
>
> We are finalizing our staff reviews for the upcoming HPC meeting scheduled for Monday, April 21st. Before finalizing our report on the application for 1723 Vickers Circle, could you please provide information for the following questions?
>
> 1. Can you clarify exactly what modifications are proposed to the window configuration on the rear façade of the house?
>
> Please provide all information that you can before Monday, April 14th. Our reports will be finalized next week and will be sent out along with the agenda for the meeting to applicants.
>
> Thank You,
>
> Paige

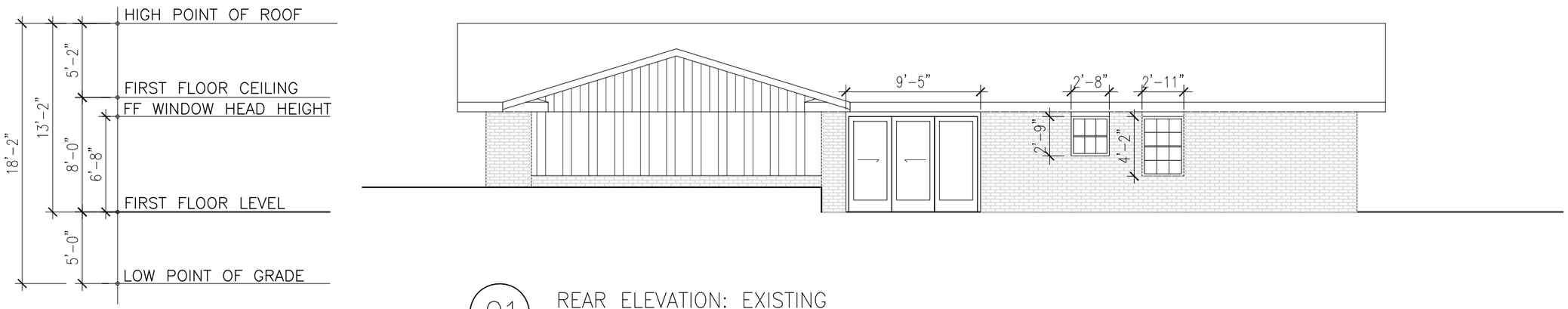

01 REAR ELEVATION: EXISTING
SCALE: 1/8" = 1'-0"

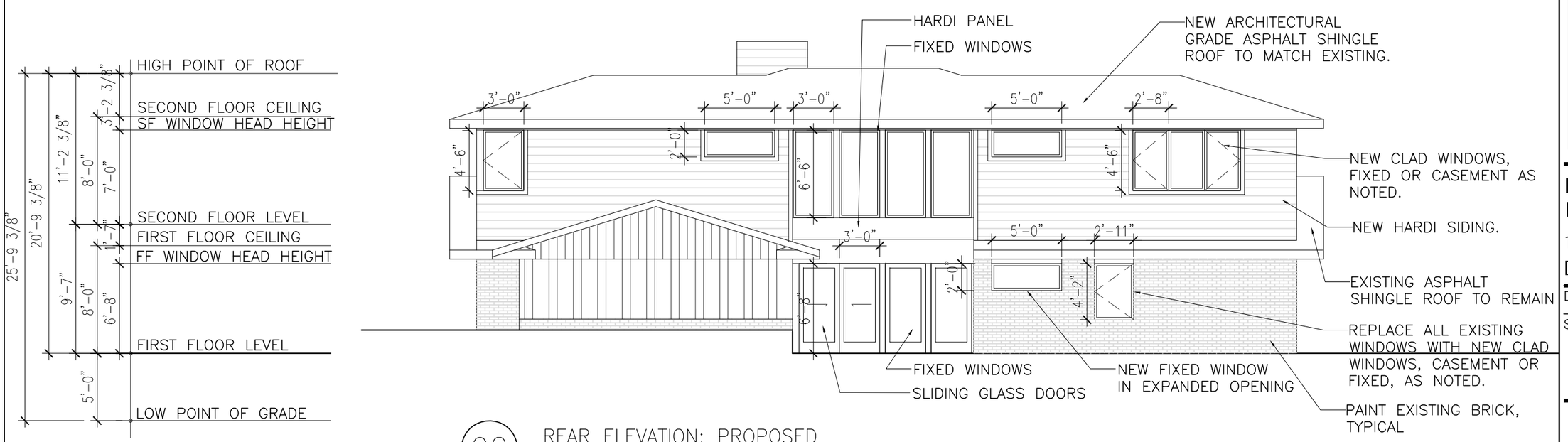

02 REAR ELEVATION: PROPOSED
SCALE: 1/8" = 1'-0"

EZEKIEL ARCHITECTS, PC
153 Greenwood Place
Decatur, GA 30030
T: 404.788.2135
rosalie@ezekielarchitects.com

Date	Revision
07/18/24	Cert. of Appropriateness

NOT FOR CONSTRUCTION

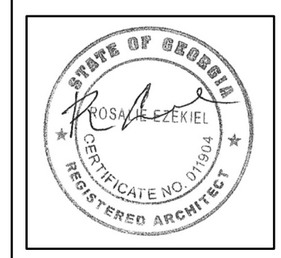

Masta Residence
1723 Vickers Circle
Decatur, GA

Date 07/18/24
Scale As Noted

REAR ELEVATIONS

A-10

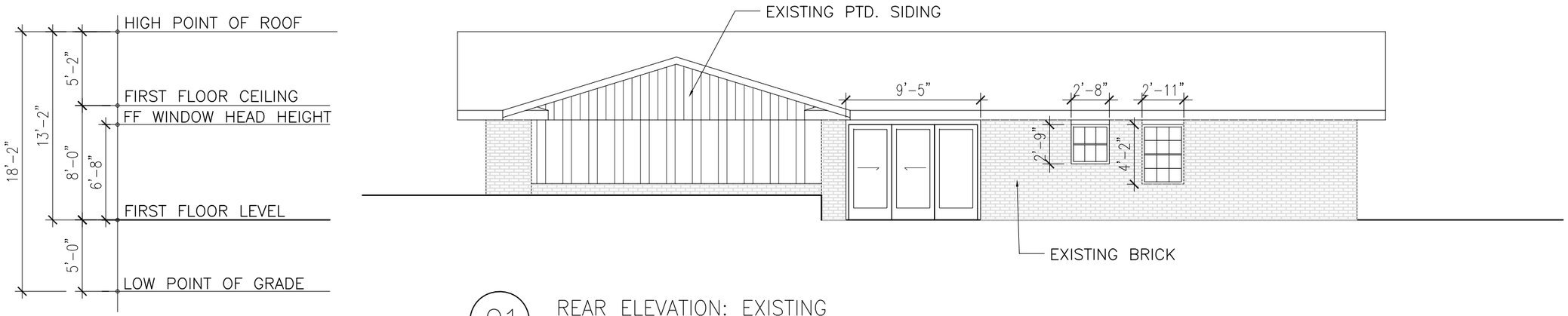

01 REAR ELEVATION: EXISTING
SCALE: 1/8" = 1'-0"

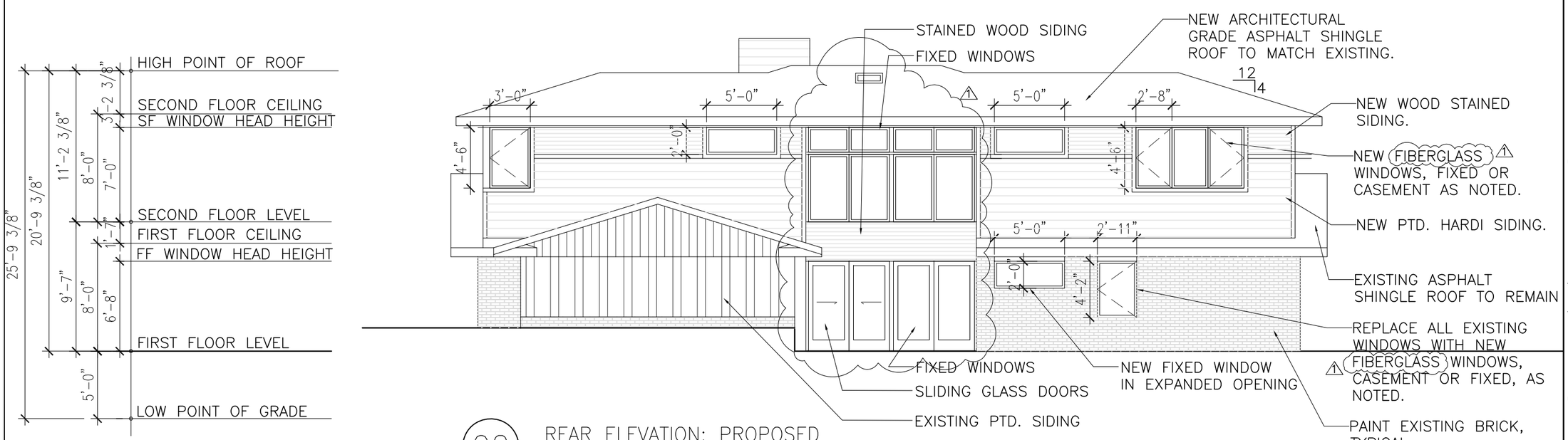

02 REAR ELEVATION: PROPOSED
SCALE: 1/8" = 1'-0"

EZEKIEL ARCHITECTS, PC
153 Greenwood Place
Decatur, GA 30030
T: 404.788.2135
rosalie@ezekielarchitects.com

Date	Revision
07/18/24	Cert. of Appropriateness
03/18/25	REVISED FOR Cert. of Appropriateness

NOT FOR CONSTRUCTION

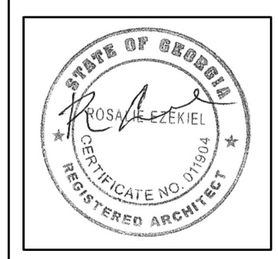

Masta Residence
1723 Vickers Circle
Decatur, GA

Date 07/18/24
Scale As Noted

REAR ELEVATIONS

A-10

ANDERSEN™
WINDOWS & DOORS

100 SERIES

A MODERN LOOK
THAT'S EASY ON THE BUDGET.

2022 PRODUCT GUIDE FOR PROFESSIONALS

CONTENTS

Performance 2
Durability 3
Fibrex® Material 4-5
Window & Door Types 6-7
New Construction, Remodeling & Replacement 9
Exterior & Interior Colors 10
Hardware 11
Glass Options 12
Grille & Insect Screen Options 13
Build Bigger Views 14

100 SERIES WINDOWS

Windows Overview 15
- Casement Windows 18
- Awning Windows 25
- Single-Hung Windows 30
- Gliding Windows 52
- Picture, Transom & Specialty Windows 66

100 SERIES PATIO DOORS

Patio Doors Overview 91
- Gliding Patio Doors 93
- Patio Door Sidelights & Transoms 95

Combination Designs 99
Product Performance 102
Installation Accessories & Information 109
Sustainability 112

For warranty information, visit **andersenwindows.com/warranty**.

ENERGY STAR AWARD 2021
PARTNER OF THE YEAR
Sustained Excellence

Andersen Corporation, including its subsidiaries, has been named a 2021 ENERGY STAR Partner of the Year – Sustained Excellence Award winner, the highest honor given by ENERGY STAR, for continued leadership in protecting the environment through superior energy efficiency achievements.

"ENERGY STAR" is a registered trademark of the U.S. Environmental Protection Agency.

AMERICA'S MOST LOVED BRAND OF WINDOWS & DOORS.*

You want to give your customers a home they love, and we're here to make that easy for you. That's why we're proud to offer you products that rate #1 in quality and performance,** and to be the #1 trusted and recommended window and door brand** by pros.

100 SERIES PRODUCTS

The best way to give your customers a modern look that's within budget and lasts† The 100 Series product line is made from our proprietary Fibrex® material that's energy efficient, environmentally responsible and stronger than vinyl.

*2020 Andersen brand surveys of U.S. realtors, contractors and builders.
**2020 Andersen brand surveys of U.S. contractors, builders and architects. †See the limited warranty for details.

PERFORMANCE

100 Series products simply perform like modern windows and doors should. They're made from our proprietary Fibrex® material, which is extremely low maintenance and blocks thermal transfer 700 times better than aluminum to help your customers save money on heating and cooling costs.

ATTRACTIVE CORNER SEAMS

Low-visibility corner seams for a cleaner and more modern look.

COLORS THAT LAST

Durable factory-finished interiors and exteriors never need painting and won't fade, flake, blister or peel,* even in extreme cold or heat.

ATTRACTIVE MATTE INTERIORS

Premium matte finish isn't shiny like vinyl and is available in white, Sandtone, dark bronze and black.**

ENERGY EFFICIENT IN EVERY CLIMATE

Energy-efficient 100 Series products are available with options that make them ENERGY STAR® certified throughout the U.S. so they can help reduce heating and cooling bills.

Visit **andersenwindows.com/energystar** for more information and to verify that the product with your glass option is certified in your area.

ASK ABOUT ENERGY STAR

DESIGNED FOR PERFORMANCE

100 Series products are designed to meet or exceed performance requirements in all 50 states.† See pages 103-104 for details.

PG50†† PERFORMANCE
OPTIONAL PERFORMANCE UPGRADE
100SHS4066 DPUP +50/-50
(AAMA/WDMA/CSA 101/I.S.2/A440-08 & -11)

EASY TO OPERATE FOR YEARS TO COME

All 100 Series products are tested to the extreme to deliver years* of smooth, reliable operation.

SUPERIOR WEATHER RESISTANCE

Our weather-resistant construction seals out drafts, wind and water so well that your reputation is protected whatever the weather.

QUALITY SO SOLID, THE WARRANTY IS TRANSFERABLE*

Many other window and door warranties end when a home is sold, but our coverage — 20 years on glass, 10 years on non-glass parts — transfers from each owner to the next. And because it's not prorated, the coverage offers full benefits year after year, owner after owner. So it can add real value when you decide to sell your home.

OWNER2OWNER® LIMITED WARRANTY

*Visit andersenwindows.com/warranty for details.
**Products with Sandtone, dark bronze and black interiors have matching exteriors.
†See your local code official for code requirements in your area.
††100SHS4066 DPUP IG +50/50 (AAMA/WDMA/CSA 101/I.S.2/A440-08 & -11). Optional PG50 performance grade upgrade is available for most sizes. For more information, visit andersenwindows.com/100series.
"ENERGY STAR" is a registered trademark of the U.S. Environmental Protection Agency.

DURABILITY

Think vinyl, only stronger. The proprietary Fibrex® material in our 100 Series products has all the benefits of vinyl while holding up better to weather and wear. This way, your customers' windows and doors are better protected from warping and cracking, even in tough climates*.

FIBREX® MATERIAL 12X THICKER FINISH THAN PAINTED VINYL**

The finish on 100 Series products has superior scratch resistance compared to painted vinyl windows** so they'll look beautiful for years to come.

FIBREX® MATERIAL 2X STRONGER THAN VINYL

Fibrex material retains its stability and rigidity in all climates, delivering exceptional durability. It makes our 100 Series products rigid and strong so the weathertight seals stay weathertight.

FIBREX® MATERIAL WITHSTANDS 150° TEMPERATURES

100 Series products can withstand temperatures up to 150°F, even for dark colors, meaning they won't warp due to sun exposure.

*See the limited warranty for details.
**When 100 Series products were tested against five leading competitors' painted vinyl window products.

FIBREX® MATERIAL

Developed by Andersen, Fibrex material is a revolutionary structural composite material that blends the very best attributes of vinyl and wood. Fibrex material saves on natural resources because it's composed of 40% reclaimed wood fiber by weight. Special polymer formulations surround and fill each wood fiber, enabling top performance. The result is a material that provides uncommon value and enhances the quality of any project. In use for over two decades in Andersen® products, Fibrex material has proven its strength and durability in all types of climates.

REVOLUTIONARY BUILDING MATERIAL

- Twice as strong as vinyl so weathertight seals stay weathertight
- Blocks thermal transfer nearly 700 times better than aluminum to help reduce heating and cooling bills
- Retains its stability and rigidity in all climates for exceptional durability
- Offers superior scratch resistance compared to painted vinyl*

ENVIRONMENTALLY RESPONSIBLE

- Since Andersen developed the highly sustainable Fibrex material, reuse of waste wood fiber has prevented the harvesting of nearly 90 million board feet of timber
- 100 Series products can help builders earn LEED® points in three key categories: Energy & Atmosphere, Materials & Resources and Indoor Environmental Quality
- 100 Series products meet or exceed California Section 01350 Specification, a California indoor emission standard — one of the toughest in the country
- Like all Andersen products, 100 Series products are designed to last** and help reduce future waste streams

INDOOR ADVANTAGE GOLD BUILDING MATERIALS

See how Andersen created Fibrex material at **andersenwindows.com/fibrex**.

*Visit andersenwindows.com/warranty for details.
**When tested against five leading competitors' painted vinyl window products.

STABLE & PREDICTABLE

Fibrex® material is twice as stiff as vinyl. This strength makes it a better choice over time.

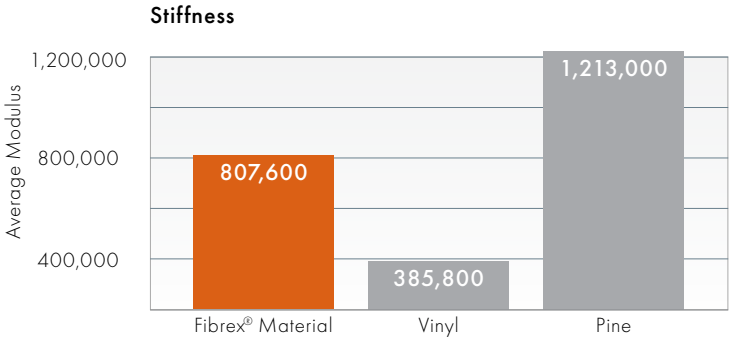

DURABLE & RELIABLE

All materials expand and contract when exposed to extreme temperatures. In these types of conditions, Fibrex material performs twice as well as vinyl, which can bow and crack over time.

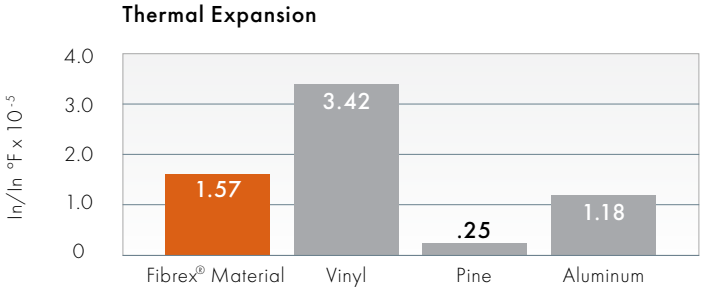

EXCELLENT INSULATOR

The built-in thermal qualities of Fibrex material mean that less heat and cold get transferred through the product into your customers' homes. As an insulator, it's on par with vinyl and far superior to aluminum.

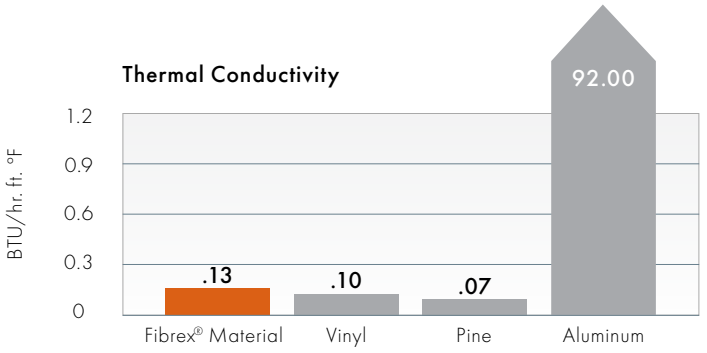

MOISTURE RESISTANT

Because Fibrex material combines wood fiber and a special polymer formula, water has a tough time penetrating. The result is an increased resistance to rot.

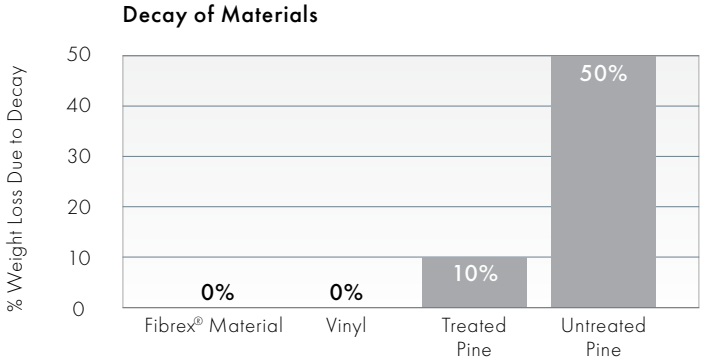

HEAT RESISTANT

Fibrex material can withstand temperatures in excess of 150°F, even for dark colors, making it a great fit for your projects in hot climates.

WINDOW & DOOR TYPES

CASEMENT & AWNING WINDOWS

Casement windows are hinged on the side and open outward to the left or right, while awning windows are hinged at the top and open outward. Both are also available as non-operating stationary windows.

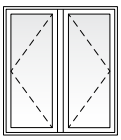

Twin Casement

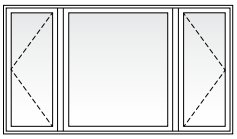

Picture With Flanking Casements

SINGLE-HUNG WINDOWS

Single-hung windows feature a fixed upper sash with an operable lower sash that slides up and down.
For convenience, the hardware locks automatically when the window is closed. An arch single-hung is also available to add architectural interest.

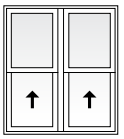

Twin Single-Hung

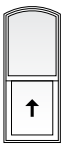

Arch Single-Hung

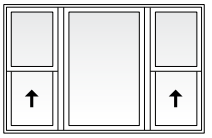

Picture With Flanking Single-Hungs

GLIDING WINDOWS

Gliding windows have one stationary sash and one operating sash that glides horizontally. A three-sash configuration, where two sash glide past a fixed center sash, is also available.

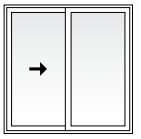

Gliding
Active-Stationary

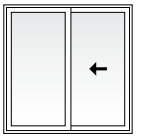

Gliding
Stationary-Active

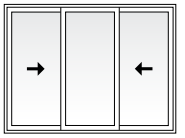

Gliding
Active-Stationary-Active, 1:1:1 Sash Ratio

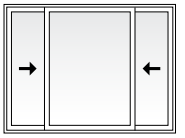

Gliding
Active-Stationary-Active, 1:2:1 Sash Ratio

CUSTOM SIZES

Available in custom sizes to fit all projects.

PICTURE, TRANSOM & SPECIALTY WINDOWS

Choose from a variety of shapes to make a signature statement or provide a delicate lighting accent. Shapes include picture, transom, half circle, quarter circle, circle, Springline™ and arch windows. Custom shapes are also available, including unequal leg arch, trapezoid, pentagon, octagon and triangle windows.

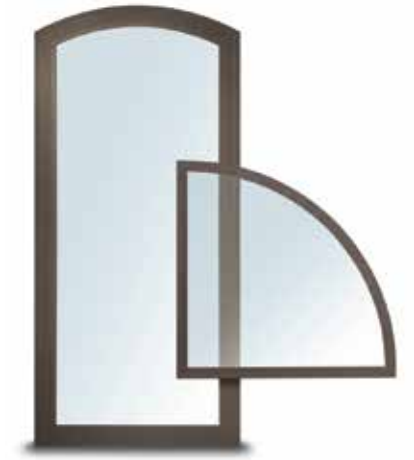

GLIDING PATIO DOORS

Patio doors feature one stationary panel and one operating panel that glides smoothly on adjustable rollers. They feature a multi-point locking system for enhanced security and an optional exterior keyed lock for convenience. Sidelights and transoms are also available.

FIBREX® MATERIAL

STRONG ON PERFORMANCE.

NEW CONSTRUCTION

You'll find a 100 Series window or door to match any project from commercial to residential — no matter the location. And with uniform sight lines, it's easy to specify 100 Series products for the entire project.

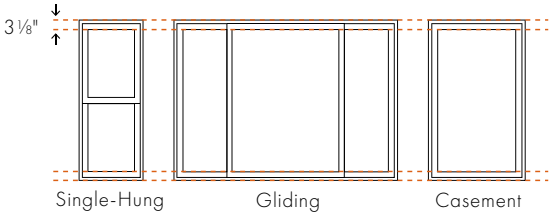

- 3 ⅛" (79) uniform sight lines allow for easy specification.
- An extension jamb attachment flange is available for easy application of extension jambs on the job site.
- Single-hung drywall pass-through windows have an upper sash that can be easily removed on the job site after the window is installed. With both sash removed, drywall can easily fit through upper floor windows.

FRAME TYPES: **1⅜" Flange Setback or 1" Flange Setback With Stucco Key**

For new construction, both frames have an integral installation flange that makes installation into a new opening easy and helps make sure the windows and doors are weathertight. For stucco exteriors, choose the frame with the stucco key to eliminate gaps that can result from the natural contraction of exterior stucco.

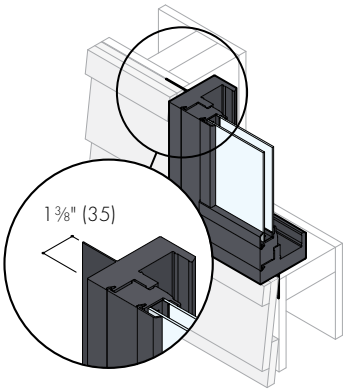

1⅜" (35) Flange Setback

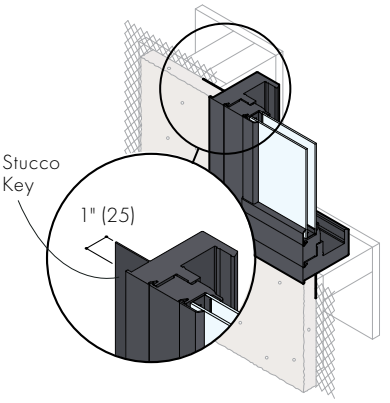

1" (25) Flange Setback With Stucco Key

REMODELING & REPLACEMENT

Whether you're adding or updating, Andersen® 100 Series windows and patio doors enhance any project with a variety of styles, shapes and colors, with custom sizing in ⅛" (3) increments. The no-flange frame options include pre-drilled, through-the-jamb installation holes and installation screws to save you time.

FRAME TYPES: **No Flange or Insert**

The no flange frame allows for full removal of an existing window in situations where the frame is rotten or damaged. The no flange window is then installed into the existing rough opening. The insert frame provides fast and easy window replacement when installing the window into an existing window frame without disturbing the interior or exterior trim, saving time and money. The exterior accessory kerf allows for convenient finishing of the window. An exterior sill extender is available to fill the gap at the sill. Exterior frame extenders and a head expander are also available.

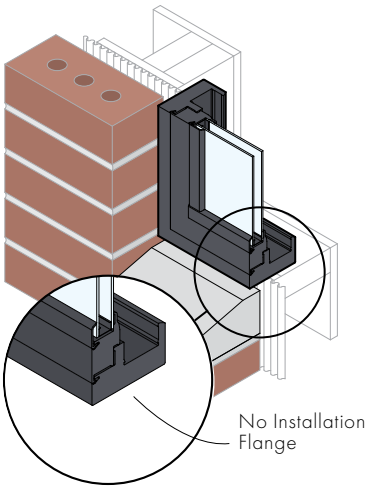

No Flange

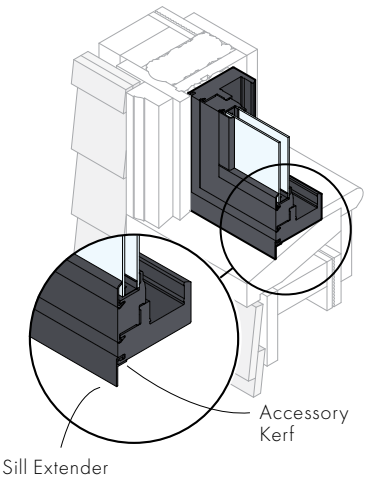

Insert

Dimensions in parenthesis are in millimeters.

EXTERIOR & INTERIOR COLORS

100 Series windows and patio doors come in five exterior colors, including dark bronze and black – colors that are darker and richer than those of most vinyl windows. The interiors feature a premium matte finish for an attractive appearance.

EXTERIOR COLORS

White | Sandtone | Terratone | Dark Bronze | Black

INTERIOR COLORS

White | Sandtone* | Dark Bronze* | Black*

*Products with Sandtone, dark bronze and black interiors have matching exteriors.
Printing limitations prevent exact duplication of colors. See your Andersen supplier for actual color samples.

HARDWARE

Casement & Awning Windows

Antique Brass | Black | Dark Bronze
Sandtone | Satin Nickel | White

Folding handles avoid interference with window treatments.

Single-Hung & Gliding Windows

Standard Lock

Optional Lift/Pull

Hardware color matches the window's interior color. Shown in white.

Optional Metal Slim Line Lock

Antique Brass | Black | **Dark Bronze**
Sandtone | Satin Nickel | White

Both lock styles automatically engage when window is closed.

Bold name denotes finish shown.

Gliding Patio Doors

Standard Handle

TULSA

Exterior handle matches the door's exterior color. Interior handle matches the door's interior color. Dark bronze exterior and white interior shown.

Optional Handle

AFTON

Antique Brass | Black
Bright Brass | **Satin Nickel**

Optional auxiliary foot lock is available to secure the gliding panel and provides an extra measure of security when the door is in a locked position. See page 92.

Bold name denotes finish shown.

Printing limitations prevent exact replication of colors and finishes. See your Andersen supplier for actual color and finish samples.

GLASS OPTIONS

Andersen has the glass you need to get the performance you want, with options for every climate, project and customer. Check with your supplier for the selections that meet ENERGY STAR® requirements in your area.

GLASS		ENERGY		LIGHT	
		U-Factor How well a product prevents heat from escaping.	**Solar Heat Gain Coefficient** How well a product blocks heat caused by sunlight.	**Visible Light Transmittance** How much visible light comes through a product.	**UV Protection** How well a product blocks ultraviolet rays.
SmartSun™	Thermal control similar to tinted glass, with visible light transmittance similar to Low-E glass.	●●●○	●●●●	●●◐○	●●●●
SmartSun with HeatLock® Coating	Applied to the room-side surface, it reflects heat back into the home and improves U-Factor values.	●●●◐	●●●●	●●○○	●●●●
Low-E	Outstanding overall performance for climates where both heating and cooling costs are a concern.	●●●○	●●●○	●●●○	●●●○
Low-E with HeatLock Coating	Applied to the room-side surface, it reflects heat back into the home and improves U-Factor values.	●●●◐	●●●○	●●◐○	●●●○
Sun	Outstanding thermal control in southern climates where less solar heat gain is desired.	●●●○	●●●●	●○○○	●●●○
PassiveSun®	Ideal for northern, passive solar construction applications where solar heat gain is desired.	●●◐○	●○○○	●●●○	●●◐○
PassiveSun with HeatLock Coating	Applied to the room-side surface, it reflects heat back into the home and improves U-Factor values.	●●●○	●○○○	●●◐○	●●◐○
Clear Dual-Pane	High visibility with basic thermal performance.	●○○○	○○○○	●●●●	○○○○

Center of glass performance only. Ratings based on glass options as of January 2022. Visit andersenwindows.com/energystar for ENERGY STAR map and NFRC total unit performance data.

HEATLOCK TECHNOLOGY

Applied to the room-side glass surface, HeatLock coating reflects heat back into the home for improved performance.

TIME-SAVING FILM

We protect our products during delivery and construction with translucent film on the glass that peels away for a virtually spotless window.

For more details on our glass options, visit **andersenwindows.com/glass**.

ASK ABOUT ENERGY STAR

ADDITIONAL GLASS OPTIONS

Tempered safety glass is standard on patio doors and required for larger window sizes.

Patterned glass lets in light while obscuring vision and adds a unique, decorative touch. Cascade and Reed patterns can be ordered with either a vertical or horizontal orientation.

Cascade

Fern

Obscure

Reed

Satin Etch

GLASS SPACER OPTIONS

In addition to stainless steel glass spacers, black glass spacers are now available as a standard offering to provide another way to customize project designs and achieve a contemporary style. Black glass spacers blend in with the color of the window or door for a sleek design, or serve as a shadow line.

Add full divided light grilles, and the grille spacer bar between the glass will match the selected glass spacer color.

Black

Stainless Steel

"ENERGY STAR" is a registered trademark of the U.S. Environmental Protection Agency.

GRILLE OPTIONS

Grilles for Andersen® 100 Series windows and patio doors are available in a wide variety of patterns to complement virtually any style of home. Plus, they have options for easy cleaning and architectural authenticity many vinyl windows can't match.

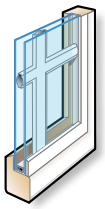

Finelight grilles-between-the-glass

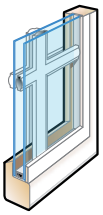

Finelight grilles-between-the-glass with permanent exterior grilles

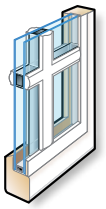

Permanent exterior and permanent interior grilles with spacer

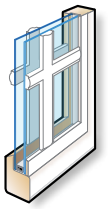

Permanent exterior and permanent interior grilles with no spacer

FINELIGHT™ GRILLES BETWEEN-THE-GLASS

Make glass easy to clean and have an elegant, sculpted profile. Choose a two-sided color scheme to match both the interior and exterior of the window or patio door. Also available with exterior grilles to provide architectural style and detail.

FULL DIVIDED LIGHT

Permanently applied to the exterior and interior of the window, with a spacer between the glass.

SIMULATED DIVIDED LIGHT

Permanently applied to the exterior and interior of the window, with no spacer between the glass.

Grille Bar Widths Actual width shown.

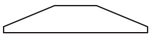

¾" (19) width grille bar for windows.

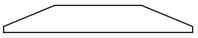

1" (25) width grille bar for patio doors.

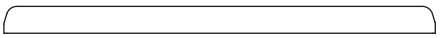

A 2 ¼" (57) width profile is available for most units to simulate a meeting rail or a multi-unit combination, such as a transom over a window or patio door.

Grille Patterns

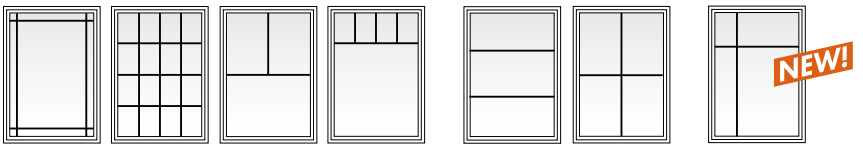

Prairie A | Colonial | Tall Fractional | Short Fractional | Specified Equal Light* | Custom

To see all of the standard patterns available for a specific window or door, refer to the detailed product sections in this product guide or contact your Andersen supplier.

INSECT SCREEN OPTIONS

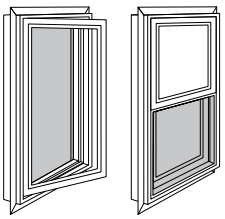

Insect screens for venting windows have a fiberglass screen mesh. Optional TruScene® insect screens are made with a micro-fine stainless steel mesh, providing 50% greater clarity than our conventional insect screens. Insect screen frames for casement and awning windows are color matched to the product interior and for single-hung and gliding windows are matched to the product exterior.

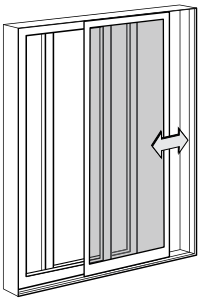

Gliding insect screens for 2-panel gliding patio doors have a fiberglass screen mesh. Insect screen frames for doors are color matched to the product exterior.

*Specify number of same-size rectangles across or down.
Dimensions in parentheses are in millimeters.

AN EASIER WAY TO BUILD BIGGER VIEWS

Our unique reinforced joining systems make it easier for you to design and install large window combinations in your projects. These systems use strong, fiberglass construction and can be joined at our factory, on the job site, or even within a rough opening — wherever works best for you. This way you can easily and confidently build bigger views for your customers. Non-reinforced joining options include factory-joined combinations or field joining kits. For more information, visit **andersenwindows.com/joining**.

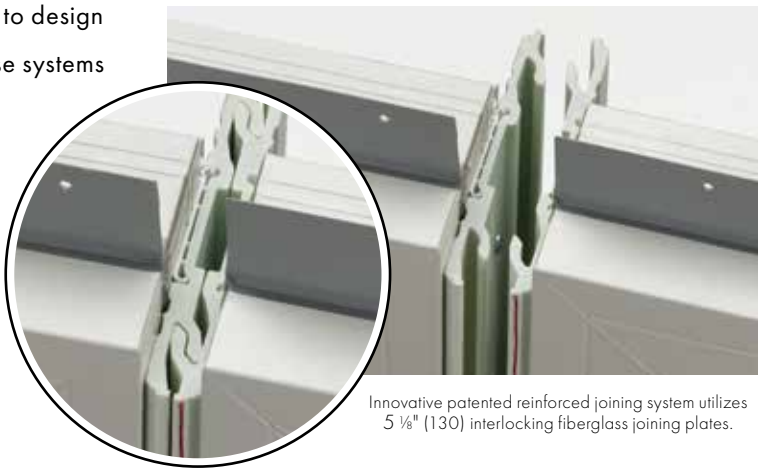

Innovative patented reinforced joining system utilizes 5 ⅛" (130) interlocking fiberglass joining plates.

Reinforced Factory-Joined Combinations

Eliminate the need for job site assembly and receive fully joined, factory-assembled window combinations to fit rough openings up to 12' (3658) x 8' (2438) or 8' (2438) x 12' (3658).

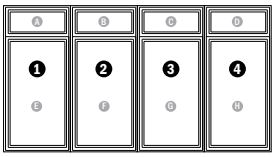

Reinforced Easy Connect Joining System

Receive lighter, easier-to-handle, pre-assembled smaller combinations that join as you install them into the rough opening, making it easier to install large combinations. In fact, most contractors surveyed said they could reduce the number of installers by 50% using the Andersen Easy Connect Joining System.*

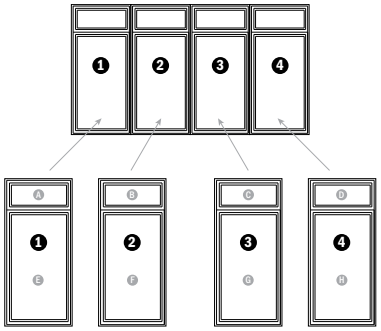

Reinforced & Non-Reinforced Interiors

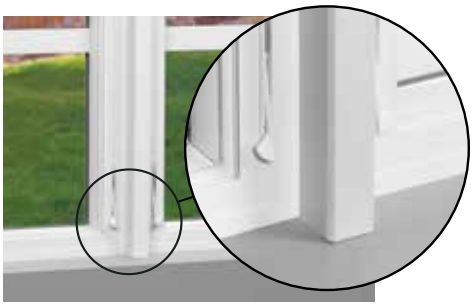

Appearance of a reinforced join.

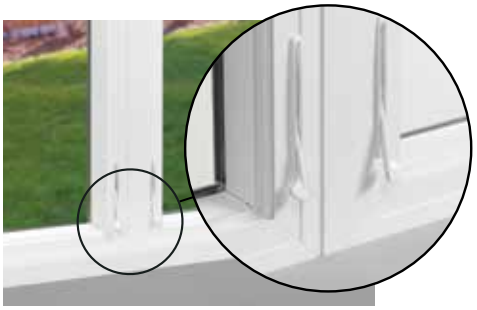

Appearance of a non-reinforced join.

	ASSEMBLY	READY TO INSTALL	NUMBER OF INSTALLERS*	HALLMARK CERTIFIED**	TESTED TO AAMA 450	PERFORMANCE	COMBINATION SIZE LIMITATIONS
REINFORCED FACTORY-JOINED COMBINATIONS	FACTORY	●	MORE	●	●	EXTENSIVE UNIT COMBINATION SIZE OPTIONS AVAILABLE CERTIFIED TO PG50**	MAX. JOIN LENGTH: 12' MAX. JOINED COMBINATION: 12' x 8' or 8' x 12' 96 sq. ft. or 8.92 m²
REINFORCED JOINING KITS	JOB SITE		MORE	●	●	EXTENSIVE UNIT COMBINATION SIZE OPTIONS AVAILABLE CERTIFIED TO PG50**	MAX. JOIN LENGTH: 12' MAX. JOINED COMBINATION: 16' x 9' or 12' x 12' 144 sq. ft. or 13.34 m²
REINFORCED FACTORY-PREPPED EASY CONNECT JOINING SYSTEM	IN THE OPENING	●	FEWER	●	●	EXTENSIVE UNIT COMBINATION SIZE OPTIONS AVAILABLE CERTIFIED TO PG50**	MAX. JOIN LENGTH: 12' MAX. JOINED COMBINATION HEIGHT: 16' NO MAXIMUM WIDTH
NON-REINFORCED FACTORY-JOINED COMBINATIONS	FACTORY	●	MORE	●	●	EXTENSIVE UNIT COMBINATION SIZE OPTIONS AVAILABLE CERTIFIED UP TO PG50**	MAX. JOIN LENGTH: 8' MAX. JOINED COMBINATION: 12' x 8' or 8' x 12' 96 sq. ft. or 8.92 m²
NON-REINFORCED JOINING KITS	JOB SITE		MORE	●	●	EXTENSIVE UNIT COMBINATION SIZE OPTIONS AVAILABLE CERTIFIED UP TO PG50**	MAX. JOIN LENGTH: 8' MAX. JOINED COMBINATION: 12' x 8' or 8' x 12' 96 sq. ft. or 8.92 m²

*69% of 156 builders/general contractors in a 2018 survey said they could reduce the number of installers by half using the Easy Connect Joining System when comparing the installation of a 12' (3658) wide x 8' (2438) high pre-assembled window combination unit with four 3' (914) wide x 8' (2438) high window combination units.

**When installed according to Andersen installation instructions.

Dimensions in parentheses are in millimeters.

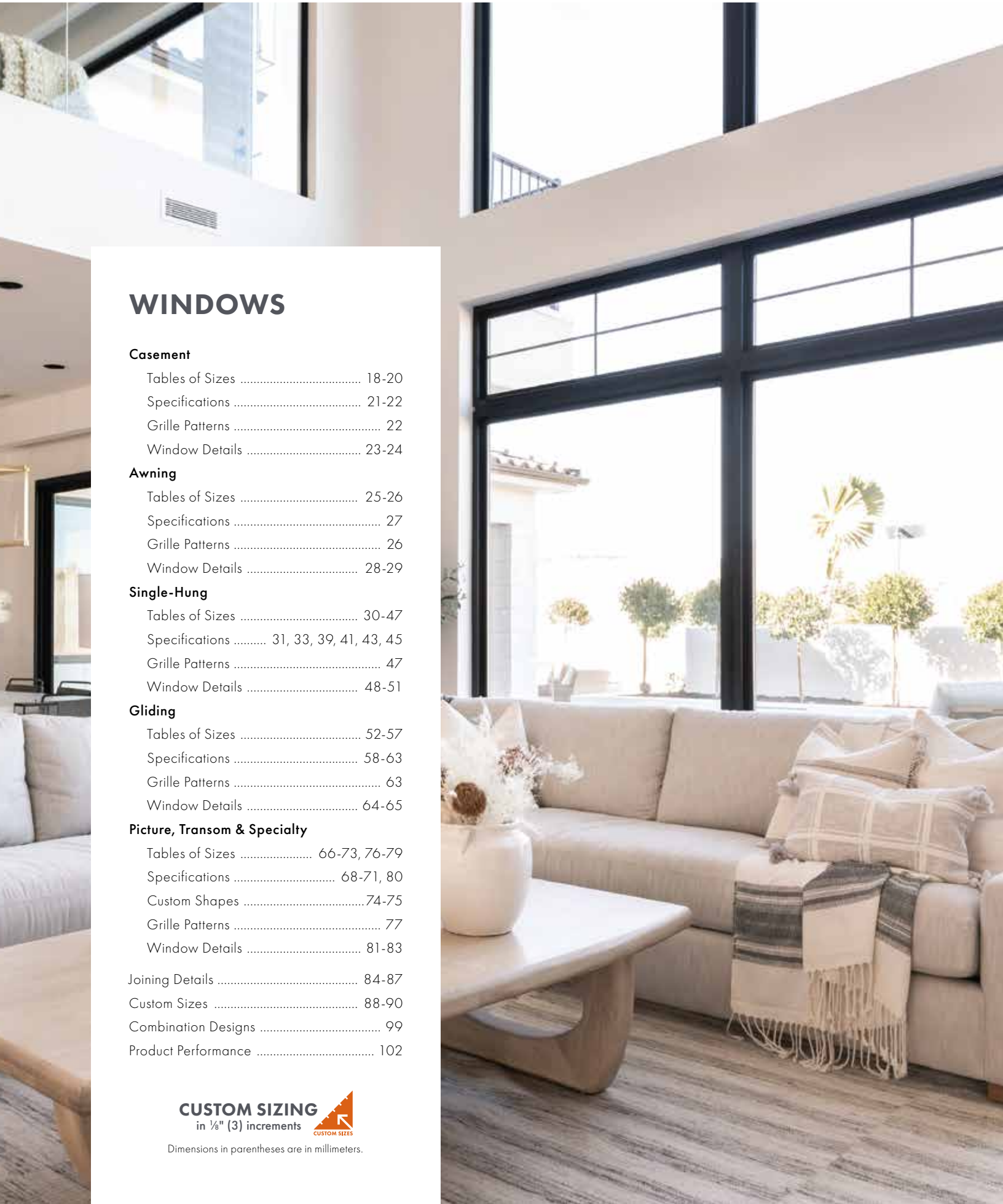

WINDOWS

Casement

Tables of Sizes 18-20
Specifications 21-22
Grille Patterns 22
Window Details 23-24

Awning

Tables of Sizes 25-26
Specifications 27
Grille Patterns 26
Window Details 28-29

Single-Hung

Tables of Sizes 30-47
Specifications 31, 33, 39, 41, 43, 45
Grille Patterns 47
Window Details 48-51

Gliding

Tables of Sizes 52-57
Specifications 58-63
Grille Patterns 63
Window Details 64-65

Picture, Transom & Specialty

Tables of Sizes 66-73, 76-79
Specifications 68-71, 80
Custom Shapes 74-75
Grille Patterns 77
Window Details 81-83

Joining Details 84-87
Custom Sizes 88-90
Combination Designs 99
Product Performance 102

CUSTOM SIZING
in ⅛" (3) increments

CUSTOM SIZES

Dimensions in parentheses are in millimeters.

FEATURES

CASEMENT & AWNING

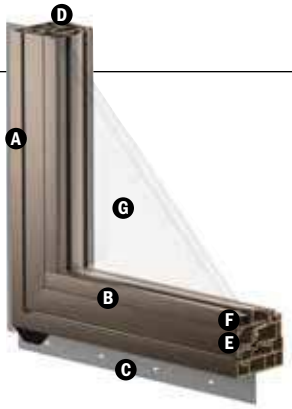

FRAME

A The frame is constructed with Fibrex® composite material. This construction produces a rigid frame.

B Durable, low-maintenance finish won't fade, flake, blister or peel.*

Concealed receiving brackets mounted on the hinge side of the frame keep the sash tightly secured within the window frame when closed.

C Four frame options are available. See "Common Features" for details.

SASH

D Fibrex material construction provides long-lasting performance.* The sash, finished with a durable capping, provides maximum protection and a matte, low-maintenance finish.

E The dual weatherstrip system combines both an exterior watershed design and a bulb weatherstrip seal between the sash and frame. The result is a long-lasting,* energy-efficient barrier against wind, water and dust.

GLASS

F A glazing bead and silicone provide superior weathertightness and durability.

G See "Common Features" for details.

HARDWARE

Sash operator provides almost effortless opening and closing, regardless of window size. Long-lasting stainless steel hinge channels are used at the head and sill to provide easy operation.

Single-Action Casement Lock

A single-action lock easily releases all concealed locking points on the casement sash. The color or finish of the lock hardware matches the handle.

Awning Sash Locks

Awning sash locks provide an added measure of security and weathertightness. Awning hardware style and color options are compatible with 100 Series casement windows to ensure a consistent appearance when used in combination designs.

SINGLE-HUNG

FRAME

A The frame is constructed with Fibrex composite material. This construction produces a rigid frame.

B A durable, side-loaded balancer provides for easy sash opening and closing. The lower sash can be removed without the use of tools.

C Durable, low-maintenance finish won't fade, flake, blister or peel.*

D Four frame options are available. See "Common Features" for details.

E Weep holes are located on the exterior nose of the sill for proper water management.

SASH

The lower sash has a meeting rail cover with a unique raised profile design, allowing the sash to be opened and closed easily.

F Fibrex material construction provides long-lasting performance.* The sash, finished with a durable capping, provides maximum protection and a matte, low-maintenance finish.

G Dual felt weatherstrip provides a long-lasting,* energy-efficient barrier against wind, water and dust.

GLASS

H A glazing bead and silicone provide superior weathertightness and durability.

I See "Common Features" for details.

HARDWARE

Sash Lock

The sash lock engages automatically when the lower sash is closed. The standard sash lock matches the window's interior color.

ADDITIONAL SASH & SHAPE OPTIONS

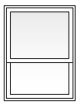

Reverse Cottage Sash

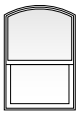

Arch Single-Hung

COMMON FEATURES

FRAME

Four frame options include:

- 1 3/8" (35) flange setback for siding applications. An integral rigid vinyl flange helps seal the unit to the structure.
- 1" (25) flange setback with stucco key. An integral rigid vinyl flange helps seal the unit to the structure.
- No-flange option for window replacement in an existing framed opening.
- Insert option for window replacement in an existing window frame.

GLASS

High-Performance options include:

- Low-E SmartSun™ glass
- Low-E SmartSun HeatLock® glass
- Low-E glass
- Low-E HeatLock glass
- Low-E Sun glass
- Low-E PassiveSun® glass
- Low-E PassiveSun HeatLock glass
- Clear Dual-Pane glass

Tempered laminated and other glass options are available. Contact your Andersen supplier.

A removable translucent film helps shield the glass from damage during delivery and construction, and simplifies finishing at the job site.

Patterned Glass

Patterned glass options are available. See page 12 for more details.

Glass Spacers

Glass spacers are now available in black, in addition to stainless steel, to provide more ways to customize project designs and achieve a contemporary look. (E-Series window is shown above.)

Performance Grade (PG) Upgrades

Optional performance grade upgrades are available for select sizes allowing units to achieve PG50. Performance Grade (PG) ratings are more comprehensive than Design Pressure (DP) ratings for measuring product performance. Choosing the PG50 upgrade doesn't change the appearance of the unit.

*Visit andersenwindows.com/warranty for details.

**Products with Sandtone, dark bronze and black interiors have matching exteriors.

Dimensions in parentheses are in millimeters.

Printing limitations prevent exact duplications of colors. See your Andersen supplier for actual color samples.

COLOR OPTIONS

EXTERIOR COLORS

White | Sandtone | Terratone

Dark Bronze | Black

INTERIOR COLORS

White | Sandtone**

Dark Bronze** | Black**

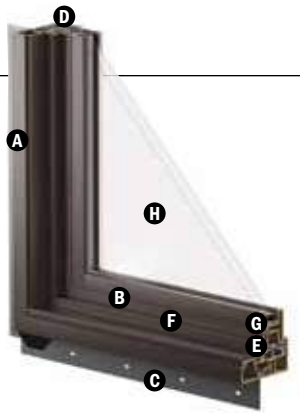

GLIDING

FRAME

A The frame is constructed with Fibrex® composite material. This construction produces a rigid frame.

B Durable, low-maintenance finish won't fade, flake, blister or peel.*

C Four frame options are available. See "Common Features" for details.

SASH

The operating sash has a meeting stile cover with a unique raised profile design, allowing the sash to be opened and closed easily.

D Fibrex material construction provides long-lasting performance.* The sash, finished with a durable capping, provides maximum protection and a matte, low-maintenance finish.

E Dual felt weatherstrip provides a long-lasting,* energy-efficient barrier against wind, water and dust.

F Operating sash has four metal rollers mounted at the bottom for easy, smooth travel over the sill.

GLASS

G A glazing bead and silicone provide superior weathertightness and durability.

H See "Common Features" for details.

HARDWARE

Sash Lock

The sash lock engages automatically when the operable sash is closed. The standard sash lock matches the window's interior color.

PICTURE, TRANSOM & SPECIALTY

FRAME

A The frame is constructed with Fibrex composite material. This construction produces a rigid frame.

B Durable, low-maintenance finish won't fade, flake, blister or peel.*

C Four frame options are available. See "Common Features" for details.

GLASS

D A glazing bead and silicone provide superior weathertightness and durability.

E See "Common Features" for details.

SHAPES

Along with rectangular windows, half circle, quarter circle, circle, Springline™ and arch windows are available in both standard and custom sizes. Custom windows are also available in unequal leg arch, trapezoid, pentagon, octagon and triangle shapes.

HARDWARE

Casement & Awning

Antique Brass | Black
Dark Bronze | Sandtone
Satin Nickel | White

Folding handles avoid interference with window treatments.

Single-Hung & Gliding

Standard Lock

Optional Lift/Pull

Hardware color matches the window's interior color.

Optional Slim Line Metal Lock

Antique Brass | Black | **Dark Bronze**
Sandtone | Satin Nickel | White

Bold name denotes color or finish shown.

HARDWARE FINISHES

Antique Brass | Black | Dark Bronze | Sandtone | Satin Nickel | White

ACCESSORIES Sold Separately

HARDWARE

Window Opening Control Device

A window opening control device is available for casement, single-hung and gliding windows, which limits sash travel to less than 4" (102) when the window is first opened. Available factory applied, or as a field-applied kit in stone, white and black.

Vent Limiter for Awning Windows

A vent limiter is available for awning windows, which prevents opening the sash more than 4" (102). Available factory applied or as a field-applied kit.

GRILLES

Grilles are available in a variety of configurations. See page 13 for details.

INSECT SCREENS

Conventional Insect Screens

Insect screens have charcoal gray fiberglass screen mesh. For casement and awning windows, frames are color matched to the product interior. For single-hung and gliding windows, stainless steel springs hold the insect screen tightly to the window frame, and their frames are available in colors to match the product exterior.

TruScene® Insect Screens

Andersen® TruScene insect screens let in over 25% more fresh air** and provide 50% greater clarity than conventional Andersen insect screens, all while keeping out unwanted small insects. For casement and awning windows, the frame color matches the product interior. For single-hung and gliding windows, the frame color matches the product exterior.

*Visit andersenwindows.com/warranty for details.
**TruScene insect screens let in over 25% more fresh air than standard Andersen fiberglass insect screens.

Dimensions in parentheses are in millimeters.
Printing limitations prevent exact replication of colors and finishes. See your Andersen supplier for actual color and finish samples.

Table of Casement Window Sizes

Scale 1/8" (3) = 1'-0" (305) – 1:96

Window Dimension	1'-5 1/2" (445)	1'-11 1/2" (597)	2'-5 1/2" (749)	2'-11 1/2" (902)
Minimum Rough Opening	1'-6" (457)	2'-0" (610)	2'-6" (762)	3'-0" (914)
Unobstructed Glass	11 1/4" (286)	17 1/4" (438)	23 1/4" (591)	29 1/4" (743)

CUSTOM WIDTHS – 17 1/2" to 35 1/2"

CUSTOM HEIGHTS – 23 1/2" to 71 1/2"

Height	Rough Opening	Unobstructed Glass	1'-5 1/2" (445)	1'-11 1/2" (597)	2'-5 1/2" (749)	2'-11 1/2" (902)
1'-11 1/2" (597)	2'-0" (610)	17 1/4" (438)	1620	2020	2620	3020
2'-5 1/2" (749)	2'-6" (762)	23 1/4" (591)	1626	2026	2626	3026
2'-11 1/2" (902)	3'-0" (914)	29 1/4" (743)	1630	2030	2630	3030
3'-5 1/2" (1054)	3'-6" (1067)	35 1/4" (895)	1636	2036	2636	3036◊
3'-11 1/2" (1207)	4'-0" (1219)	41 1/4" (1048)	1640	2040	2640◊	3040◊
4'-5 1/2" (1359)	4'-6" (1372)	47 1/4" (1200)	1646	2046	2646◊	3046◊
4'-11 1/2" (1511)	5'-0" (1524)	53 1/4" (1353)	1650	2050	2650◊	3050◊
5'-5 1/2" (1664)	5'-6" (1676)	59 1/4" (1505)	1656	2056	2656◊	3056◊
5'-11 1/2" (1816)	6'-0" (1829)	65 1/4" (1657)	1660	2060	2660◊	3060◊

Custom-size windows are available in 1/8" (3) increments.

See page 88 for custom sizes and specifications.

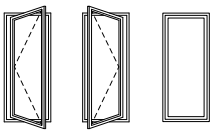

Left Right Stationary

Choose left, right or stationary as viewed from the exterior. Right venting shown in table.

Details shown on pages 23-24.

Grille patterns shown on page 22.

• "Window Dimension" always refers to outside frame-to-frame dimension.
• "**Minimum Rough Opening**" **dimensions may need to be increased to allow for use of building wraps, flashing, sill panning, brackets, fasteners or other items. See page 110 for more details.**
• Dimensions in parentheses are in millimeters.
◊ Meetss or exceed clear opening area of 5.7 sq. ft. or 0.53 m², clear opening width of 20" (508) and clear opening height of 24" (610). See table on page 21.

Table of Twin Casement Window Sizes

Scale 1/8" (3) = 1'-0" (305) – 1:96

Window Dimension	2'-11 1/2" (902)	3'-5 1/2" (1054)	3'-11 1/2" (1207)	4'-5 1/2" (1359)	4'-11 1/2" (1511)	5'-5 1/2" (1664)	5'-11 1/2" (1816)
Minimum Rough Opening	3'-0" (914)	3'-6" (1067)	4'-0" (1219)	4'-6" (1372)	5'-0" (1524)	5'-6" (1676)	6'-0" (1829)
Unobstructed Glass (width of single sash)	11 1/4" (286)	14 1/4" (362)	17 1/4" (438)	20 1/4" (514)	23 1/4" (591)	26 1/4" (667)	29 1/4" (743)
11 1/2" (292) / 1'-0" (305) / 5 1/4" (133)	1610-2	1910-2	2010-2	2310-2	2610-2	2910-2	3010-2
1'-5 1/2" (445) / 1'-6" (457) / 11 1/4" (286)	1616-2	1916-2	2016-2	2316-2	2616-2	2916-2	3016-2
1'-11 1/2" (597) / 2'-0" (610) / 17 1/4" (438)	1620-2	1920-2	2020-2	2320-2	2620-2	2920-2	3020-2
CUSTOM WIDTHS – 35 1/2" to 71 1/2"							
1'-11 1/2" (597) / 2'-0" (610) / 17 1/4" (438)	1620-2	1920-2	2020-2	2320-2	2620-2	2920-2	3020-2
2'-5 1/2" (749) / 2'-6" (762) / 23 1/4" (591)	1626-2	1926-2	2026-2	2326-2	2626-2	2926-2	3026-2
2'-11 1/2" (902) / 3'-0" (914) / 29 1/4" (743)	1630-2	1930-2	2030-2	2330-2	2630-2	2930-2	3030-2
3'-5 1/2" (1054) / 3'-6" (1067) / 35 1/4" (895)	1636-2	1936-2	2036-2	2336-2	2636-2	2936-2◊	3036-2◊
3'-11 1/2" (1207) / 4'-0" (1219) / 41 1/4" (1048)	1640-2	1940-2	2040-2	2340-2	2640-2◊	2940-2◊	3040-2◊
4'-5 1/2" (1359) / 4'-6" (1372) / 47 1/4" (1200)	1646-2	1946-2	2046-2	2346-2	2646-2◊	2946-2◊	3046-2◊
4'-11 1/2" (1511) / 5'-0" (1524) / 53 1/4" (1353)	1650-2	1950-2	2050-2	2350-2	2650-2◊	2950-2◊	3050-2◊
5'-5 1/2" (1664) / 5'-6" (1676) / 59 1/4" (1505)	1656-2	1956-2	2056-2	2356-2	2656-2◊	2956-2◊	3056-2◊
5'-11 1/2" (1816) / 6'-0" (1829) / 65 1/4" (1657)	1660-2	1960-2	2060-2	2360-2	2660-2◊	2960-2◊	3060-2◊

CUSTOM HEIGHTS – 23 1/2" to 71 1/2"

Custom-size windows are available in 1/8" (3) increments. See page 88 for custom sizes and specifications.

Choose left, right or stationary as viewed from the exterior. In addition to venting shown, other standard configurations are available. Windows have one continuous outer frame.

Twin transoms are also shown. See pages 70-71 for more information.

Details shown on pages 23-24. Grille patterns shown on page 22.

- "Window Dimension" always refers to outside frame-to-frame dimension.
- **"Minimum Rough Opening" dimensions may need to be increased to allow for use of building wraps, flashing, sill panning, brackets, fasteners or other items. See page 110 for more details.**
- Dimensions in parentheses are in millimeters.

◊Meets or exceed clear opening area of 5.7 sq. ft. or 0.53 m², clear opening width of 20" (508) and clear opening height of 24" (610). See table on pages 21-22.

Table of Sizes – Picture Window With Flanking Casements

Scale 1/8" (3) = 1'-0" (305) — 1:96

Window Dimension	5'-11 1/2" (1816)	7'-11 1/2" (2426)	9'-11 1/2" (3035)	11'-11 1/2" (3645)
Minimum Rough Opening	6'-0" (1829)	8'-0" (2438)	10'-0" (3048)	12'-0" (3658)
Unobstructed Glass (width of center sash)	29 1/4" (743)	41 1/4" (1048)	53 1/4" (1353)	65 1/4" (1657)
Unobstructed Glass (width of single flanking sash)	11 1/4" (286)	17 1/4" (438)	23 1/4" (591)	29 1/4" (743)

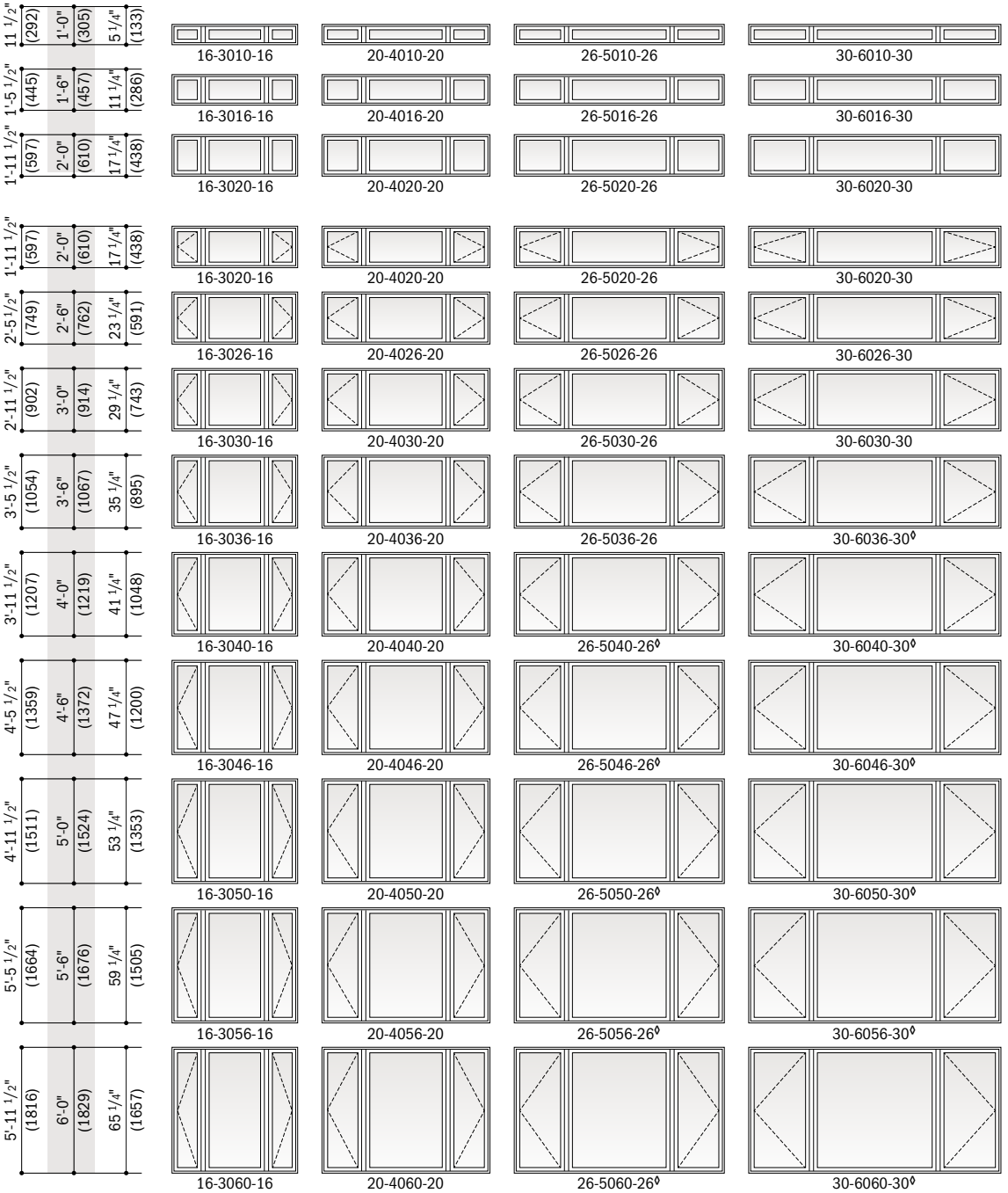

Choose left, right or stationary as viewed from the exterior. In addition to venting shown, other standard configurations are available. Windows have one continuous outer frame.

Transoms are also shown. See pages 70-71 for more information.

Details shown on pages 23-24. Grille patterns shown on page 22.

- "Window Dimension" always refers to outside frame-to-frame dimension.
- "**Minimum Rough Opening**" **dimensions may need to be increased to allow for use of building wraps, flashing, sill panning, brackets, fasteners or other items. See page 110 for more details.**
- Dimensions in parentheses are in millimeters.

◊ Meets or exceed clear opening area of 5.7 sq.ft. or 0.53 m^2, clear opening width of 20" (508) and clear opening height of 24" (610).

Casement Window Opening and Area Specifications

Window Number	Clear Opening Area Sq. Ft./(m²)	Clear Opening in Full Open Position Width Inches/(mm)	Clear Opening in Full Open Position Height Inches/(mm)	Glass Area Sq. Ft./(m²)	Vent Area Sq. Ft./(m²)	Top of Subfloor to Top of Inside Sill Stop Inches/(mm)	Overall Window Area Sq. Ft./(m²)	Hinge Type
1620	0.67 (0.06)	5 3/8" (137)	17 13/16" (452)	1.35 (0.13)	1.46 (0.14)	61 9/16" (1564)	2.86 (0.27)	wash mode
1626	0.89 (0.08)	5 3/8" (137)	23 13/16" (605)	1.82 (0.17)	1.95 (0.18)	55 9/16" (1411)	3.59 (0.33)	wash mode
1630	1.12 (0.10)	5 3/8" (137)	29 13/16" (757)	2.29 (0.21)	2.44 (0.23)	49 9/16" (1259)	4.31 (0.40)	wash mode
1636	1.34 (0.12)	5 3/8" (137)	35 13/16" (909)	2.75 (0.26)	2.94 (0.27)	43 9/16" (1106)	5.04 (0.47)	wash mode
1640	1.57 (0.15)	5 3/8" (137)	41 13/16" (1062)	3.22 (0.30)	3.43 (0.32)	37 9/16" (954)	5.77 (0.54)	wash mode
1646	1.79 (0.17)	5 3/8" (137)	47 13/16" (1214)	3.69 (0.34)	3.92 (0.36)	31 9/16" (802)	6.50 (0.60)	wash mode
1650	2.02 (0.19)	5 3/8" (137)	53 13/16" (1367)	4.16 (0.39)	4.41 (0.41)	25 9/16" (649)	7.23 (0.67)	wash mode
1656	2.24 (0.21)	5 3/8" (137)	59 13/16" (1519)	4.63 (0.43)	4.90 (0.46)	19 9/16" (497)	7.96 (0.74)	wash mode
1660	2.47 (0.23)	5 3/8" (137)	65 13/16" (1671)	5.10 (0.47)	5.40 (0.50)	13 9/16" (344)	8.69 (0.81)	wash mode
2020	1.41 (0.13)	11 3/8" (289)	17 13/16" (452)	2.07 (0.19)	2.20 (0.20)	61 9/16" (1564)	3.84 (0.36)	wash mode
2026	1.88 (0.18)	11 3/8" (289)	23 13/16" (605)	2.79 (0.26)	2.94 (0.27)	55 9/16" (1411)	4.81 (0.45)	wash mode
2030	2.36 (0.22)	11 3/8" (289)	29 13/16" (757)	3.50 (0.33)	3.69 (0.34)	49 9/16" (1259)	5.79 (0.54)	wash mode
2036	2.83 (0.26)	11 3/8" (289)	35 13/16" (909)	4.22 (0.39)	4.43 (0.41)	43 9/16" (1106)	6.77 (0.63)	wash mode
2040	3.31 (0.31)	11 3/8" (289)	41 13/16" (1062)	4.94 (0.46)	5.17 (0.48)	37 9/16" (954)	7.75 (0.72)	wash mode
2046	3.78 (0.35)	11 3/8" (289)	47 13/16" (1214)	5.66 (0.53)	5.91 (0.55)	31 9/16" (802)	8.73 (0.81)	wash mode
2050	4.26 (0.40)	11 3/8" (289)	53 13/16" (1367)	6.38 (0.59)	6.65 (0.62)	25 9/16" (649)	9.71 (0.90)	wash mode
2056	4.73 (0.44)	11 3/8" (289)	59 13/16" (1519)	7.10 (0.66)	7.40 (0.69)	19 9/16" (497)	10.69 (0.99)	wash mode
2060	5.21 (0.48)	11 3/8" (289)	65 13/16" (1671)	7.82 (0.73)	8.14 (0.76)	13 9/16" (344)	11.67 (1.08)	wash mode
2620	2.15 (0.20)	17 3/8" (442)	17 13/16" (452)	2.79 (0.26)	2.94 (0.27)	61 9/16" (1564)	4.81 (0.45)	wash mode
2626	2.88 (0.27)	17 3/8" (442)	23 13/16" (605)	3.75 (0.35)	3.94 (0.37)	55 9/16" (1411)	6.04 (0.56)	wash mode
2630	3.60 (0.33)	17 3/8" (442)	29 13/16" (757)	4.72 (0.44)	4.93 (0.46)	49 9/16" (1259)	7.27 (0.68)	wash mode
2636	4.33 (0.40)	17 3/8" (442)	35 13/16" (909)	5.69 (0.53)	5.92 (0.55)	43 9/16" (1106)	8.50 (0.79)	wash mode
2640 ◊	6.30 (0.59)	21 11/16" (551)	41 13/16" (1062)	6.66 (0.62)	6.91 (0.64)	37 9/16" (954)	9.73 (0.90)	widest clear opening
2646 ◊	7.21 (0.67)	21 11/16" (551)	47 13/16" (1214)	7.63 (0.71)	7.90 (0.73)	31 9/16" (802)	10.96 (1.02)	widest clear opening
2650 ◊	8.11 (0.75)	21 11/16" (551)	53 13/16" (1367)	8.60 (0.80)	8.90 (0.83)	25 9/16" (649)	12.19 (1.13)	widest clear opening
2656 ◊	9.02 (0.84)	21 11/16" (551)	59 13/16" (1519)	9.57 (0.89)	9.89 (0.92)	19 9/16" (497)	13.42 (1.25)	widest clear opening
2660 ◊	9.92 (0.92)	21 11/16" (551)	65 13/16" (1671)	10.54 (0.98)	10.88 (1.01)	13 9/16" (344)	14.65 (1.36)	widest clear opening
3020	2.89 (0.27)	23 3/8" (594)	17 13/16" (452)	3.50 (0.33)	3.69 (0.34)	61 9/16" (1564)	5.79 (0.54)	wash mode
3026	3.87 (0.36)	23 3/8" (594)	23 13/16" (605)	4.72 (0.44)	4.93 (0.46)	55 9/16" (1411)	7.27 (0.68)	wash mode
3030	4.84 (0.45)	23 3/8" (594)	29 13/16" (757)	5.94 (0.55)	6.17 (0.57)	49 9/16" (1259)	8.75 (0.81)	wash mode
3036 ◊	5.82 (0.54)	23 3/8" (594)	35 13/16" (909)	7.16 (0.67)	7.41 (0.69)	43 9/16" (1106)	10.23 (0.95)	wash mode
3040 ◊	6.79 (0.63)	23 3/8" (594)	41 13/16" (1062)	8.38 (0.78)	8.65 (0.80)	37 9/16" (954)	11.71 (1.09)	wash mode
3046 ◊	7.77 (0.72)	23 3/8" (594)	47 13/16" (1214)	9.60 (0.89)	9.90 (0.92)	31 9/16" (802)	13.19 (1.23)	wash mode
3050 ◊	8.74 (0.81)	23 3/8" (594)	53 13/16" (1367)	10.82 (1.00)	11.14 (1.03)	25 9/16" (649)	14.67 (1.36)	wash mode
3056 ◊	9.72 (0.90)	23 3/8" (594)	59 13/16" (1519)	12.04 (1.12)	12.38 (1.15)	19 9/16" (497)	16.15 (1.50)	wash mode
3060 ◊	10.69 (0.99)	23 3/8" (594)	65 13/16" (1671)	13.25 (1.23)	13.62 (1.27)	13 9/16" (344)	17.63 (1.64)	wash mode

- "Top of Subfloor to Top of Inside Sill Stop" is calculated based upon a structural header height of 6'-10 1/2" (2096).
- Dimensions in parentheses are in millimeters or square meters.

◊ Meets or exceed clear opening area of 5.7 sq. ft. or 0.53 m², clear opening width of 20" (508) and clear opening height of 24" (610).

Twin Casement Window Opening and Area Specifications

Window Number	Clear Opening Area Sq. Ft./(m²)	Clear Opening in Full Open Position Width Inches/(mm)	Clear Opening in Full Open Position Height Inches/(mm)	Glass Area Sq. Ft./(m²)	Vent Area Sq. Ft./(m²)	Top of Subfloor to Top of Inside Sill Stop Inches/(mm)	Overall Window Area Sq. Ft./(m²)	Hinge Type
1620-2	0.67 (0.06)	5 3/8" (137)	17 13/16" (452)	2.70 (0.25)	2.92 (0.27)	61 9/16" (1564)	5.79 (0.54)	wash mode
1626-2	0.89 (0.08)	5 3/8" (137)	23 13/16" (605)	3.63 (0.34)	3.90 (0.36)	55 9/16" (1411)	7.27 (0.68)	wash mode
1630-2	1.12 (0.10)	5 3/8" (137)	29 13/16" (757)	4.57 (0.42)	4.89 (0.45)	49 9/16" (1259)	8.75 (0.81)	wash mode
1636-2	1.34 (0.12)	5 3/8" (137)	35 13/16" (909)	5.51 (0.51)	5.87 (0.55)	43 9/16" (1106)	10.23 (0.95)	wash mode
1640-2	1.57 (0.15)	5 3/8" (137)	41 13/16" (1062)	6.45 (0.60)	6.86 (0.64)	37 9/16" (954)	11.71 (1.09)	wash mode
1646-2	1.79 (0.17)	5 3/8" (137)	47 13/16" (1214)	7.38 (0.69)	7.84 (0.73)	31 9/16" (802)	13.19 (1.23)	wash mode
1650-2	2.02 (0.19)	5 3/8" (137)	53 13/16" (1367)	8.32 (0.77)	8.82 (0.82)	25 9/16" (649)	14.67 (1.36)	wash mode
1656-2	2.24 (0.21)	5 3/8" (137)	59 13/16" (1519)	9.26 (0.86)	9.81 (0.91)	19 9/16" (497)	16.15 (1.50)	wash mode
1660-2	2.47 (0.23)	5 3/8" (137)	65 13/16" (1671)	10.20 (0.95)	10.79 (1.00)	13 9/16" (344)	17.63 (1.64)	wash mode
1920-2	1.04 (0.10)	8 3/8" (213)	17 13/16" (452)	3.41 (0.32)	3.66 (0.34)	61 9/16" (1564)	6.77 (0.63)	wash mode
1926-2	1.39 (0.13)	8 3/8" (213)	23 13/16" (605)	4.60 (0.43)	4.90 (0.45)	55 9/16" (1411)	8.50 (0.79)	wash mode
1930-2	1.74 (0.16)	8 3/8" (213)	29 13/16" (757)	5.79 (0.54)	6.13 (0.57)	49 9/16" (1259)	10.23 (0.95)	wash mode
1936-2	2.09 (0.19)	8 3/8" (213)	35 13/16" (909)	6.98 (0.65)	7.36 (0.68)	43 9/16" (1106)	11.96 (1.11)	wash mode
1940-2	2.44 (0.23)	8 3/8" (213)	41 13/16" (1062)	8.16 (0.76)	8.60 (0.80)	37 9/16" (954)	13.69 (1.27)	wash mode
1946-2	2.79 (0.26)	8 3/8" (213)	47 13/16" (1214)	9.35 (0.87)	9.83 (0.91)	31 9/16" (802)	15.42 (1.43)	wash mode
1950-2	3.14 (0.29)	8 3/8" (213)	53 13/16" (1367)	10.54 (0.98)	11.06 (1.03)	25 9/16" (649)	17.15 (1.59)	wash mode
1956-2	3.49 (0.32)	8 3/8" (213)	59 13/16" (1519)	11.73 (1.09)	12.30 (1.14)	19 9/16" (497)	18.88 (1.75)	wash mode
1960-2	3.84 (0.36)	8 3/8" (213)	65 13/16" (1671)	12.91 (1.20)	13.53 (1.26)	13 9/16" (344)	20.61 (1.91)	wash mode
2020-2	1.41 (0.13)	11 3/8" (289)	17 13/16" (452)	4.13 (0.38)	4.40 (0.41)	61 9/16" (1564)	7.75 (0.72)	wash mode

- "Top of Subfloor to Top of Inside Sill Stop" is calculated based upon a structural header height of 6'-10 1/2" (2096).
- Dimensions in parentheses are in millimeters or square meters.

◊ Meets or exceed clear opening area of 5.7 sq. ft. or 0.53 m², clear opening width of 20" (508) and clear opening height of 24" (610).

continued on next page

Twin Casement Window Opening and Area Specifications *(continued)*

Window Number	Clear Opening Area Sq. Ft./(m²)	Clear Opening in Full Open Position Width Inches/(mm)	Clear Opening in Full Open Position Height Inches/(mm)	Glass Area Sq. Ft./(m²)	Vent Area Sq. Ft./(m²)	Top of Subfloor to Top of Inside Sill Stop Inches/(mm)	Overall Window Area Sq. Ft./(m²)	Hinge Type
2026-2	1.88 (0.18)	11 3/8" (289)	23 13/16" (605)	5.57 (0.52)	5.89 (0.55)	55 9/16" (1411)	9.73 (0.90)	wash mode
2030-2	2.36 (0.22)	11 3/8" (289)	29 13/16" (757)	7.01 (0.65)	7.37 (0.68)	49 9/16" (1259)	11.71 (1.09)	wash mode
2036-2	2.83 (0.26)	11 3/8" (289)	35 13/16" (909)	8.45 (0.78)	8.86 (0.82)	43 9/16" (1106)	13.69 (1.27)	wash mode
2040-2	3.31 (0.31)	11 3/8" (289)	41 13/16" (1062)	9.88 (0.92)	10.34 (0.96)	37 9/16" (954)	15.67 (1.46)	wash mode
2046-2	3.78 (0.35)	11 3/8" (289)	47 13/16" (1214)	11.32 (1.05)	11.82 (1.10)	31 9/16" (802)	17.65 (1.64)	wash mode
2050-2	4.26 (0.40)	11 3/8" (289)	53 13/16" (1367)	12.76 (1.19)	13.31 (1.24)	25 9/16" (649)	19.63 (1.82)	wash mode
2056-2	4.73 (0.44)	11 3/8" (289)	59 13/16" (1519)	14.20 (1.32)	14.79 (1.37)	19 9/16" (497)	21.61 (2.01)	wash mode
2060-2	5.21 (0.48)	11 3/8" (289)	65 13/16" (1671)	15.63 (1.45)	16.27 (1.51)	13 9/16" (344)	23.59 (2.19)	wash mode
2320-2	1.78 (0.17)	14 3/8" (366)	17 13/16" (452)	4.85 (0.45)	5.15 (0.48)	61 9/16" (1564)	8.73 (0.81)	wash mode
2326-2	2.38 (0.22)	14 3/8" (366)	23 13/16" (605)	6.54 (0.61)	6.88 (0.64)	55 9/16" (1411)	10.96 (1.02)	wash mode
2330-2	2.98 (0.28)	14 3/8" (366)	29 13/16" (757)	8.23 (0.76)	8.61 (0.80)	49 9/16" (1259)	13.19 (1.23)	wash mode
2336-2	3.58 (0.33)	14 3/8" (366)	35 13/16" (909)	9.91 (0.92)	10.35 (0.96)	43 9/16" (1106)	15.42 (1.43)	wash mode
2340-2	4.18 (0.39)	14 3/8" (366)	41 13/16" (1062)	11.60 (1.08)	12.08 (1.12)	37 9/16" (954)	17.65 (1.64)	wash mode
2346-2	4.78 (0.44)	14 3/8" (366)	47 13/16" (1214)	13.29 (1.23)	13.81 (1.28)	31 9/16" (802)	19.88 (1.85)	wash mode
2350-2	5.38 (0.50)	14 3/8" (366)	53 13/16" (1367)	14.98 (1.39)	15.55 (1.44)	25 9/16" (649)	22.11 (2.05)	wash mode
2356-2	5.98 (0.56)	14 3/8" (366)	59 13/16" (1519)	16.66 (1.55)	17.28 (1.61)	19 9/16" (497)	24.34 (2.26)	wash mode
2360-2	6.58 (0.61)	14 3/8" (366)	65 13/16" (1671)	18.35 (1.70)	19.02 (1.77)	13 9/16" (344)	26.56 (2.47)	wash mode
2620-2	2.15 (0.20)	17 3/8" (442)	17 13/16" (452)	5.57 (0.52)	5.89 (0.55)	61 9/16" (1564)	9.71 (0.90)	wash mode
2626-2	2.88 (0.27)	17 3/8" (442)	23 13/16" (605)	7.51 (0.70)	7.87 (0.73)	55 9/16" (1411)	12.19 (1.13)	wash mode
2630-2	3.60 (0.33)	17 3/8" (442)	29 13/16" (757)	9.45 (0.88)	9.86 (0.92)	49 9/16" (1259)	14.67 (1.36)	wash mode
2636-2	4.33 (0.40)	17 3/8" (442)	35 13/16" (909)	11.38 (1.06)	11.84 (1.10)	43 9/16" (1106)	17.15 (1.59)	wash mode
2640-2 ◊	6.30 (0.59)	21 11/16" (551)	41 13/16" (1062)	13.32 (1.24)	13.82 (1.28)	37 9/16" (954)	19.63 (1.82)	widest clear opening
2646-2 ◊	7.21 (0.67)	21 11/16" (551)	47 13/16" (1214)	15.26 (1.42)	15.81 (1.47)	31 9/16" (802)	22.11 (2.05)	widest clear opening
2650-2 ◊	8.11 (0.75)	21 11/16" (551)	53 13/16" (1367)	17.20 (1.60)	17.79 (1.65)	25 9/16" (649)	24.59 (2.28)	widest clear opening
2656-2 ◊	9.02 (0.84)	21 11/16" (551)	59 13/16" (1519)	19.13 (1.78)	19.77 (1.84)	19 9/16" (497)	27.06 (2.51)	widest clear opening
2660-2 ◊	9.92 (0.92)	21 11/16" (551)	65 13/16" (1671)	21.07 (1.96)	21.76 (2.02)	13 9/16" (344)	29.54 (2.74)	widest clear opening
2920-2	2.52 (0.23)	20 3/8" (518)	17 13/16" (452)	6.29 (0.58)	6.63 (0.62)	61 9/16" (1564)	10.69 (0.99)	wash mode
2926-2	3.37 (0.31)	20 3/8" (518)	23 13/16" (605)	8.48 (0.79)	8.86 (0.82)	55 9/16" (1411)	13.42 (1.25)	wash mode
2930-2	4.22 (0.39)	20 3/8" (518)	29 13/16" (757)	10.66 (0.99)	11.10 (1.03)	49 9/16" (1259)	16.15 (1.50)	wash mode
2936-2 ◊	6.08 (0.57)	24 1/2" (621)	35 13/16" (909)	12.85 (1.19)	13.33 (1.24)	43 9/16" (1106)	18.88 (1.75)	widest clear opening
2940-2 ◊	5.92 (0.55)	20 3/8" (518)	41 13/16" (1062)	15.04 (1.40)	15.56 (1.45)	37 9/16" (954)	21.61 (2.01)	wash mode
2946-2 ◊	6.77 (0.63)	20 3/8" (518)	47 13/16" (1214)	17.23 (1.60)	17.80 (1.65)	31 9/16" (802)	24.34 (2.26)	wash mode
2950-2 ◊	7.62 (0.71)	20 3/8" (518)	53 13/16" (1367)	19.41 (1.80)	20.03 (1.86)	25 9/16" (649)	27.06 (2.51)	wash mode
2956-2 ◊	8.47 (0.79)	20 3/8" (518)	59 13/16" (1519)	21.60 (2.01)	22.27 (2.07)	19 9/16" (497)	29.79 (2.77)	wash mode
2960-2 ◊	9.32 (0.87)	20 3/8" (518)	65 13/16" (1671)	23.79 (2.21)	24.50 (2.28)	13 9/16" (344)	32.52 (3.02)	wash mode
3020-2	2.89 (0.27)	23 3/8" (594)	17 13/16" (452)	7.01 (0.65)	7.37 (0.68)	61 9/16" (1564)	11.67 (1.08)	wash mode
3026-2	3.87 (0.36)	23 3/8" (594)	23 13/16" (605)	9.45 (0.88)	9.86 (0.92)	55 9/16" (1411)	14.65 (1.36)	wash mode
3030-2	4.84 (0.45)	23 3/8" (594)	29 13/16" (757)	11.88 (1.10)	12.34 (1.15)	49 9/16" (1259)	17.63 (1.64)	wash mode
3036-2 ◊	5.82 (0.54)	23 3/8" (594)	35 13/16" (909)	14.32 (1.33)	14.82 (1.38)	43 9/16" (1106)	20.61 (1.91)	wash mode
3040-2 ◊	6.79 (0.63)	23 3/8" (594)	41 13/16" (1062)	16.76 (1.56)	17.31 (1.61)	37 9/16" (954)	23.59 (2.19)	wash mode
3046-2 ◊	7.77 (0.72)	23 3/8" (594)	47 13/16" (1214)	19.20 (1.78)	19.79 (1.84)	31 9/16" (802)	26.56 (2.47)	wash mode
3050-2 ◊	8.74 (0.81)	23 3/8" (594)	53 13/16" (1367)	21.63 (2.01)	22.27 (2.07)	25 9/16" (649)	29.54 (2.74)	wash mode
3056-2 ◊	9.72 (0.90)	23 3/8" (594)	59 13/16" (1519)	24.07 (2.24)	24.76 (2.30)	19 9/16" (497)	32.52 (3.02)	wash mode
3060-2 ◊	10.69 (0.99)	23 3/8" (594)	65 13/16" (1671)	26.51 (2.46)	27.24 (2.53)	13 9/16" (344)	35.50 (3.30)	wash mode

• "Top of Subfloor to Top of Inside Sill Stop" is calculated based upon a structural header height of 6'-10 1/2" (2096).
• Dimensions in parentheses are in millimeters or square meters.
◊ Meets or exceed clear opening area of 5.7 sq. ft. or 0.53 m², clear opening width of 20" (508) and clear opening height of 24" (610).

Grille Patterns

	Prairie A	Colonial	Simulated Meeting Rail	Modified Colonial	Tall Fractional	Short Fractional
Casement		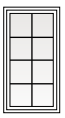			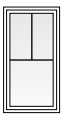	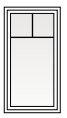

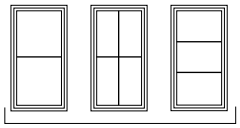

Specified Equal Light Examples

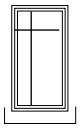

Custom Example

Number of lights and overall pattern varies with window size. Patterns shown may not be available for all sizes. Specified equal light and custom patterns are also available. For specified equal light, specify number of same-size rectangles across or down. For more information on divided light, see page 13 or visit **andersenwindows.com/grilles**.

Casement Window Details – New Construction

Scale 1 1/2" (38) = 1'-0" (305) – 1:8

1 3/8" flange setback

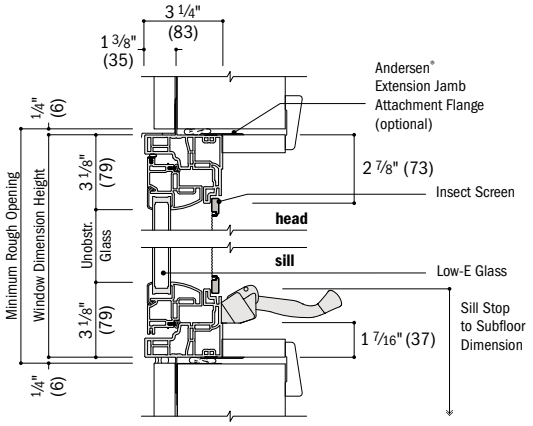

Vertical Section

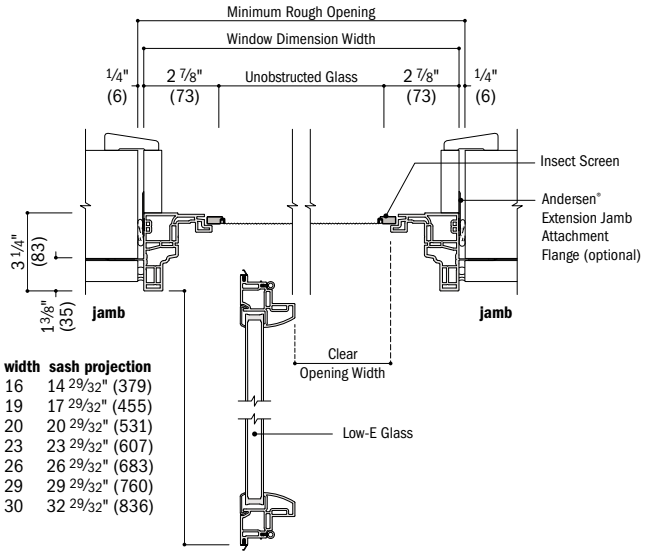

width	sash projection
16	14 29/32" (379)
19	17 29/32" (455)
20	20 29/32" (531)
23	23 29/32" (607)
26	26 29/32" (683)
29	29 29/32" (760)
30	32 29/32" (836)

Horizontal Section

1" flange setback with stucco key

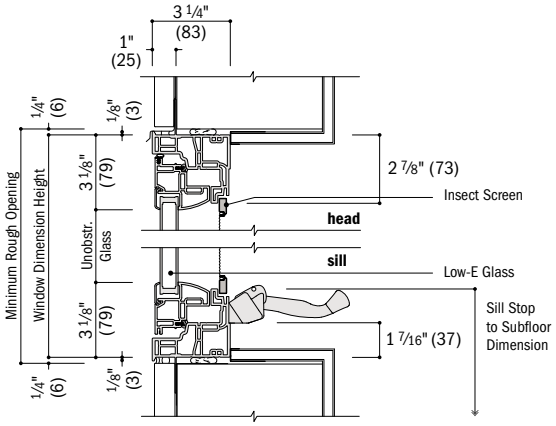

Vertical Section
Stucco Exterior

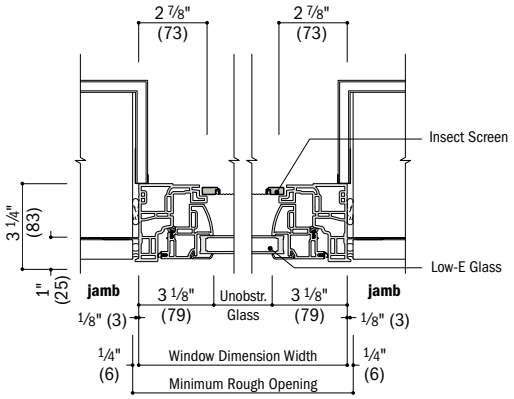

Horizontal Section
Stucco Exterior

integrals

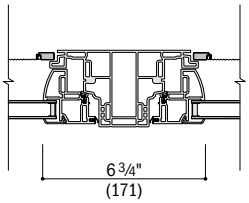

Horizontal Section
Twin Casement

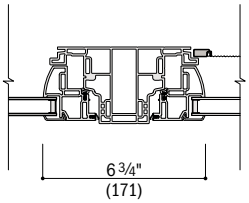

Horizontal Section
Picture With Flanking Casement

See pages 85-87 for joining details.

- Drip cap is required to complete window installation as shown but may not be included with the window. Use of drip cap is recommended for proper installation.
- Light-colored areas are parts included with window. Dark-colored areas are additional Andersen® parts required to complete window assembly as shown.
- **Minimum rough openings may need to be increased to allow for use of building wraps, flashing, sill panning, brackets, fasteners or other items. See installation information on page 110.**
- Details are for illustration only and are not intended to represent product installation methods or materials. Refer to product installation instructions at andersenwindows.com.
- Dimensions in parentheses are in millimeters.

Casement Window Details – Replacement

Scale 1 1/2" (38) = 1'-0" (305) – 1:8

no flange

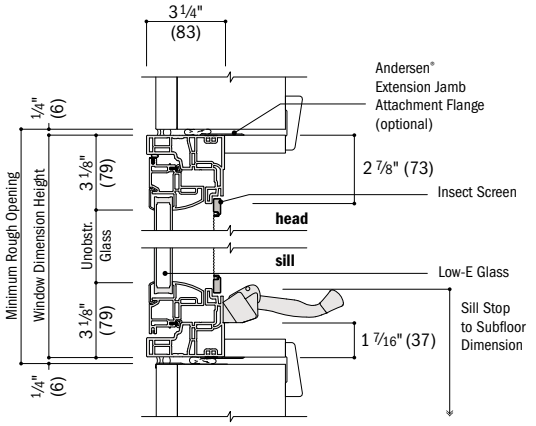

Vertical Section
Existing Framed Opening

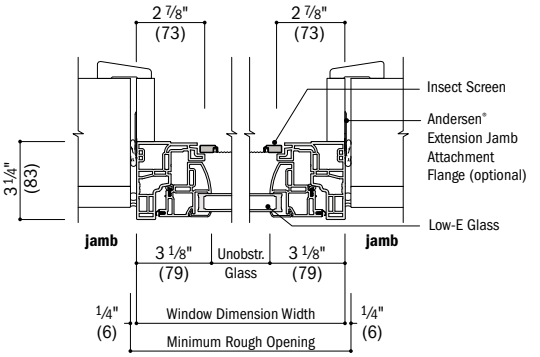

Horizontal Section
Existing Framed Opening

insert

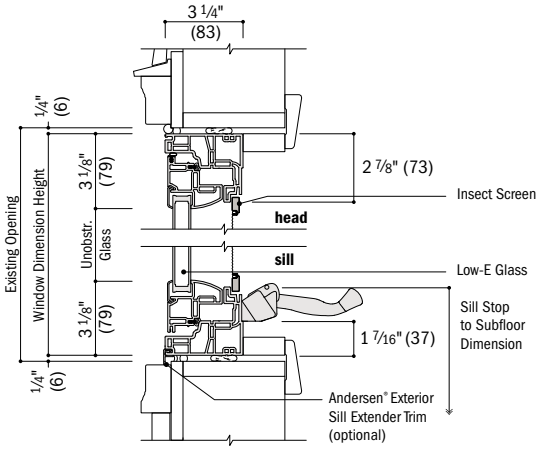

Vertical Section
Existing Window Opening

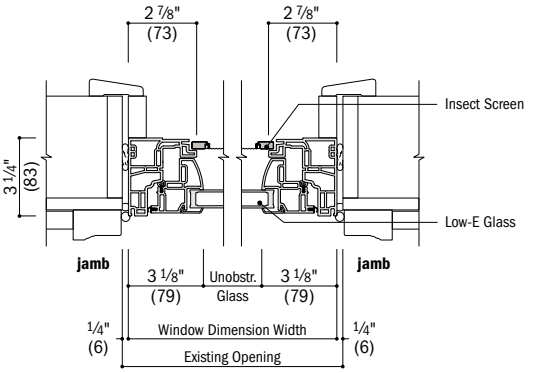

Horizontal Section
Existing Window Opening

integrals

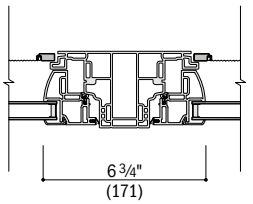

Horizontal Section
Twin Casement

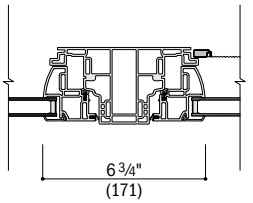

Horizontal Section
Picture With Flanking Casement

Installation accessories for insert frame shown on page 109.

See pages 84-87 for joining details.

- Drip cap is required to complete window installation as shown but may not be included with the window. Use of drip cap is recommended for proper installation.
- Light-colored areas are parts included with window. Dark-colored areas are additional Andersen® parts required to complete window assembly as shown.
- **Minimum rough openings may need to be increased to allow for use of building wraps, flashing, sill panning, brackets, fasteners or other items. See installation information on page 110.**
- Details are for illustration only and are not intended to represent product installation methods or materials. Refer to product installation instructions at andersenwindows.com.
- Dimensions in parentheses are in millimeters.

Table of Awning Window Sizes

Scale 1/8" (3) = 1'-0" (305) – 1:96

Window Dimension	1'-5 1/2" (445)	1'-11 1/2" (597)	2'-5 1/2" (749)	2'-11 1/2" (902)	3'-5 1/2" (1054)	3'-11 1/2" (1207)
Minimum Rough Opening	1'-6" (457)	2'-0" (610)	2'-6" (762)	3'-0" (914)	3'-6" (1067)	4'-0" (1219)
Unobstructed Glass	11 1/4" (286)	17 1/4" (438)	23 1/4" (591)	29 1/4" (743)	35 1/4" (895)	41 1/4" (1048)

CUSTOM WIDTHS – 17 1/2" to 47 1/2"

CUSTOM HEIGHTS – 17 1/2" to 35 1/2"

1'-5 1/2" (445) / 1'-6" (457) / 11 1/4" (286)	1'-11 1/2" (597) / 2'-0" (610) / 17 1/4" (438)	2'-5 1/2" (749) / 2'-6" (762) / 23 1/4" (591)	2'-11 1/2" (902) / 3'-0" (914) / 29 1/4" (743)
1616	2016	2616	3016
1620	2020	2620	3020
1626	2026	2626	3026
1630	2030	2630	3030

3616	4016
3620	4020
3626	4026
3630	4030

Custom-size windows are available in 1/8" (3) increments.

See page 88 for custom sizes and specifications.

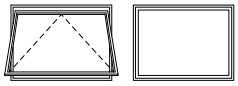

Venting Stationary

Choose venting or stationary. **Awning windows must be installed to vent as shown and should not be rotated and used as a hopper.** Details shown on pages 28-29. Grille patterns shown on page 26.

Table of Twin Awning Window Sizes

Scale 1/8" (3) = 1'-0" (305) – 1:96

Window Dimension	2'-11 1/2" (902)	3'-5 1/2" (1054)	3'-11 1/2" (1207)	4'-5 1/2" (1359)	4'-11 1/2" (1511)	5'-5 1/2" (1664)	5'-11 1/2" (1816)
Minimum Rough Opening	3'-0" (914)	3'-6" (1067)	4'-0" (1219)	4'-6" (1372)	5'-0" (1524)	5'-6" (1676)	6'-0" (1829)
Unobstructed Glass (width of single sash)	11 1/4" (286)	14 1/4" (362)	17 1/4" (438)	20 1/4" (514)	23 1/4" (591)	26 1/4" (667)	29 1/4" (743)

11 1/2" (292) / 1'-0" (305) / 5 1/4" (133)	1'-5 1/2" (445) / 1'-6" (457) / 11 1/4" (286)	1'-11 1/2" (597) / 2'-0" (610) / 17 1/4" (438)
1610-2	1616-2	1620-2
1910-2	1916-2	1920-2
2010-2	2016-2	2020-2
2310-2	2316-2	2320-2
2610-2	2616-2	2620-2
2910-2	2916-2	2920-2
3010-2	3016-2	3020-2

CUSTOM WIDTHS – 35 1/2" to 71 1/2"

CUSTOM HEIGHTS – 17 1/2" to 35 1/2"

1'-5 1/2" (445) / 1'-6" (457) / 11 1/4" (286)	1'-11 1/2" (597) / 2'-0" (610) / 17 1/4" (438)	2'-5 1/2" (749) / 2'-6" (762) / 23 1/4" (591)	2'-11 1/2" (902) / 3'-0" (914) / 29 1/4" (743)
1616-2	1620-2	1626-2	1630-2
1916-2	1920-2	1926-2	1930-2
2016-2	2020-2	2026-2	2030-2
2316-2	2320-2	2326-2	2330-2
2616-2	2620-2	2626-2	2630-2
2916-2	2920-2	2926-2	2930-2
3016-2	3020-2	3026-2	3030-2

Custom-size windows are available in 1/8" (3) increments. See page 88 for custom sizes and specifications.

Windows have one continuous outer frame.

Twin transoms are also shown. See pages 70-71 for more information.

Details shown on pages 28-29. Grille patterns shown on page 26.

- "Window Dimension" always refers to outside frame-to-frame dimension.
- "**Minimum Rough Opening**" **dimensions may need to be increased to allow for use of building wraps, flashing, sill panning, brackets, fasteners or other items. See page 110 for more details.**
- Dimensions in parentheses are in millimeters.

Table of Sizes – Picture Window Over Awning

Scale 1/8" (3) = 1'-0" (305) – 1:96

Window Dimension	1'-11 1/2" (597)	2'-5 1/2" (749)	2'-11 1/2" (902)	3'-5 1/2" (1054)	3'-11 1/2" (1207)
Minimum Rough Opening	2'-0" (610)	2'-6" (762)	3'-0" (914)	3'-6" (1067)	4'-0" (1219)
Unobstructed Glass (height of upper sash)	17 1/4" (438)	23 1/4" (591)	29 1/4" (743)	35 1/4" (895)	41 1/4" (1048)

CUSTOM WIDTHS – 17 1/2" to 47 1/2"

CUSTOM HEIGHTS – 47 1/2" to 95 1/2"

3'-11 1/2" (1207)	4'-0" (1219)	17 1/4" (610)	2020 2020	2620 2620	3020 3020	3620 3620	4020 4020
4'-11 1/2" (1511)	5'-0" (1524)	23 1/4" (591)	2026 2026	2626 2626	3026 3026	3626 3626	4026 4026
5'-11 1/2" (1816)	6'-0" (1829)	29 1/4" (743)	2030 2030	2630 2630	3030 3030	3630 3630	4030 4030
5'-11 1/2" (1816)	6'-0" (1829)	35 1/4" (895)	2040 2020	2640 2620	3040 3020	3640 3620	4040 4020
6'-11 1/2" (2121)	7'-0" (2134)	35 1/4" (895)	2040 2030	2640 2630	3040 3030	3640 3630	4040 4030
6'-11 1/2" (2121)	7'-0" (2134)	53 1/4" (1353)	2050 2020	2650 2620	3050 3020	3650 3620	4050 4020
7'-11 1/2" (2426)	8'-0" (2438)	53 1/4" (1353)	2050 2030	2650 2630	3050 3030	3650 3630	4050 4030

Custom-size windows are available in 1/8" (3) increments.

See page 89 for custom sizes and specifications.

Windows have one continuous outer frame.

For unobstructed glass height dimensions of lower sash, see page 25.

Details shown on pages 28-29.

Grille patterns shown below.

Grille Patterns

	Prairie A	Colonial	Modified Colonial*
Awning			
	Tall Fractional	Short Fractional	

*Modified colonial pattern is available only for the upper sash of a picture window over awning configuration.

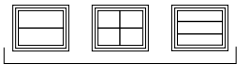

Specified Equal Light Examples

Custom Example

Number of lights and overall pattern varies with window size. Patterns shown may not be available for all sizes. Specified equal light and custom patterns are also available. For specified equal light, specify number of same-size rectangles across or down. For more information on divided light, see page 13 or visit **andersenwindows.com/grilles**.

- "Window Dimension" always refers to outside frame-to-frame dimension.
- "**Minimum Rough Opening**" **dimensions may need to be increased to allow for use of building wraps, flashing, sill panning, brackets, fasteners or other items. See page 110 for more details.**
- Dimensions in parentheses are in millimeters.

Awning Window Opening and Area Specifications

Window Number	Clear Opening Area Sq. Ft./(m²)		Clear Opening in Full Open Position Width Inches/(mm)		Clear Opening in Full Open Position Depth Inches/(mm)		Glass Area Sq. Ft./(m²)		Vent Area Sq. Ft./(m²)		Top of Subfloor to Top of Inside Sill Stop Inches/(mm)		Overall Window Area Sq. Ft./(m²)	
1616	0.66	(0.06)	11 13/16"	(300)	8"	(203)	0.88	(0.08)	0.66	(0.06)	67 9/16"	(1716)	2.13	(0.20)
1620	0.66	(0.06)	11 13/16"	(300)	8"	(203)	1.35	(0.13)	0.66	(0.06)	61 9/16"	(1564)	2.86	(0.27)
1626	0.66	(0.06)	11 13/16"	(300)	8"	(203)	1.82	(0.17)	0.66	(0.06)	55 9/16"	(1411)	3.59	(0.33)
1630	0.66	(0.06)	11 13/16"	(300)	8"	(203)	2.29	(0.21)	0.66	(0.06)	49 9/16"	(1259)	4.31	(0.40)
2016	0.99	(0.09)	17 13/16"	(452)	8"	(203)	1.35	(0.13)	0.99	(0.09)	67 9/16"	(1716)	2.86	(0.27)
2020	0.99	(0.09)	17 13/16"	(452)	8"	(203)	2.07	(0.19)	0.99	(0.09)	61 9/16"	(1564)	3.84	(0.36)
2026	0.99	(0.09)	17 13/16"	(452)	8"	(203)	2.79	(0.26)	0.99	(0.09)	55 9/16"	(1411)	4.81	(0.45)
2030	0.99	(0.09)	17 13/16"	(452)	8"	(203)	3.50	(0.33)	0.99	(0.09)	49 9/16"	(1259)	5.79	(0.54)
2616	1.32	(0.12)	23 13/16"	(605)	8"	(203)	1.82	(0.17)	1.32	(0.12)	67 9/16"	(1716)	3.59	(0.33)
2620	1.32	(0.12)	23 13/16"	(605)	8"	(203)	2.79	(0.26)	1.32	(0.12)	61 9/16"	(1564)	4.81	(0.45)
2626	1.32	(0.12)	23 13/16"	(605)	8"	(203)	3.75	(0.35)	1.32	(0.12)	55 9/16"	(1411)	6.04	(0.56)
2630	1.32	(0.12)	23 13/16"	(605)	8"	(203)	4.72	(0.44)	1.32	(0.12)	49 9/16"	(1259)	7.27	(0.68)
3016	1.66	(0.15)	29 13/16"	(757)	8"	(203)	2.29	(0.21)	1.66	(0.15)	67 9/16"	(1716)	4.31	(0.40)
3020	1.66	(0.15)	29 13/16"	(757)	8"	(203)	3.50	(0.33)	1.66	(0.15)	61 9/16"	(1564)	5.79	(0.54)
3026	1.66	(0.15)	29 13/16"	(757)	8"	(203)	4.72	(0.44)	1.66	(0.15)	55 9/16"	(1411)	7.27	(0.68)
3030	1.66	(0.15)	29 13/16"	(757)	8"	(203)	5.94	(0.55)	1.66	(0.15)	49 9/16"	(1259)	8.75	(0.81)
3616	1.99	(0.18)	35 13/16"	(909)	8"	(203)	2.75	(0.26)	1.99	(0.18)	67 9/16"	(1716)	5.04	(0.47)
3620	1.99	(0.18)	35 13/16"	(909)	8"	(203)	4.22	(0.39)	1.99	(0.18)	61 9/16"	(1564)	6.77	(0.63)
3626	1.99	(0.18)	35 13/16"	(909)	8"	(203)	5.69	(0.53)	1.99	(0.18)	55 9/16"	(1411)	8.50	(0.79)
3630	1.99	(0.18)	35 13/16"	(909)	8"	(203)	7.16	(0.67)	1.99	(0.18)	49 9/16"	(1259)	10.23	(0.95)
4016	2.32	(0.22)	41 13/16"	(1062)	8"	(203)	3.22	(0.30)	2.32	(0.22)	67 9/16"	(1716)	5.77	(0.54)
4020	2.32	(0.22)	41 13/16"	(1062)	8"	(203)	4.94	(0.46)	2.32	(0.22)	61 9/16"	(1564)	7.75	(0.72)
4026	2.32	(0.22)	41 13/16"	(1062)	8"	(203)	6.66	(0.62)	2.32	(0.22)	55 9/16"	(1411)	9.73	(0.90)
4030	2.32	(0.22)	41 13/16"	(1062)	8"	(203)	8.38	(0.78)	2.32	(0.22)	49 9/16"	(1259)	11.71	(1.09)

• "Top of Subfloor to Top of Inside Sill Stop" is calculated based upon a structural header height of 6'-10 1/2" (2096).
• Dimensions in parentheses are in millimeters or square meters.

Twin Awning Window Opening and Area Specifications

Window Number	Clear Opening Area Sq. Ft./(m²)		Clear Opening in Full Open Position Width Inches/(mm)		Clear Opening in Full Open Position Depth Inches/(mm)		Glass Area Sq. Ft./(m²)		Vent Area Sq. Ft./(m²)		Top of Subfloor to Top of Inside Sill Stop Inches/(mm)		Overall Window Area Sq. Ft./(m²)	
1616-2	0.66	(0.06)	11 13/16"	(300)	8"	(203)	1.76	(0.16)	1.31	(0.12)	67 9/16"	(1716)	4.31	(0.40)
1620-2	0.66	(0.06)	11 13/16"	(300)	8"	(203)	2.70	(0.25)	1.31	(0.12)	61 9/16"	(1564)	5.79	(0.54)
1626-2	0.66	(0.06)	11 13/16"	(300)	8"	(203)	3.63	(0.34)	1.31	(0.12)	55 9/16"	(1411)	7.27	(0.68)
1630-2	0.66	(0.06)	11 13/16"	(300)	8"	(203)	4.57	(0.42)	1.31	(0.12)	49 9/16"	(1259)	8.75	(0.81)
1916-2	0.82	(0.08)	14 13/16"	(376)	8"	(203)	2.23	(0.21)	1.65	(0.15)	67 9/16"	(1716)	5.04	(0.47)
1920-2	0.82	(0.08)	14 13/16"	(376)	8"	(203)	3.41	(0.32)	1.65	(0.15)	61 9/16"	(1564)	6.77	(0.63)
1926-2	0.82	(0.08)	14 13/16"	(376)	8"	(203)	4.60	(0.43)	1.65	(0.15)	55 9/16"	(1411)	8.50	(0.79)
1930-2	0.82	(0.08)	14 13/16"	(376)	8"	(203)	5.79	(0.54)	1.65	(0.15)	49 9/16"	(1259)	10.23	(0.95)
2016-2	0.99	(0.09)	17 13/16"	(452)	8"	(203)	2.70	(0.25)	1.98	(0.18)	67 9/16"	(1716)	5.77	(0.54)
2020-2	0.99	(0.09)	17 13/16"	(452)	8"	(203)	4.13	(0.38)	1.98	(0.18)	61 9/16"	(1564)	7.75	(0.72)
2026-2	0.99	(0.09)	17 13/16"	(452)	8"	(203)	5.57	(0.52)	1.98	(0.18)	55 9/16"	(1411)	9.73	(0.90)
2030-2	0.99	(0.09)	17 13/16"	(452)	8"	(203)	7.01	(0.65)	1.98	(0.18)	49 9/16"	(1259)	11.71	(1.09)
2316-2	1.16	(0.11)	20 13/16"	(528)	8"	(203)	3.16	(0.29)	2.31	(0.21)	67 9/16"	(1716)	6.50	(0.60)
2320-2	1.16	(0.11)	20 13/16"	(528)	8"	(203)	4.85	(0.45)	2.31	(0.21)	61 9/16"	(1564)	8.73	(0.81)
2326-2	1.16	(0.11)	20 13/16"	(528)	8"	(203)	6.54	(0.61)	2.31	(0.21)	55 9/16"	(1411)	10.96	(1.02)
2330-2	1.16	(0.11)	20 13/16"	(528)	8"	(203)	8.23	(0.76)	2.31	(0.21)	49 9/16"	(1259)	13.19	(1.23)
2616-2	1.32	(0.12)	23 13/16"	(605)	8"	(203)	3.63	(0.34)	2.65	(0.25)	67 9/16"	(1716)	7.23	(0.67)
2620-2	1.32	(0.12)	23 13/16"	(605)	8"	(203)	5.57	(0.52)	2.65	(0.25)	61 9/16"	(1564)	9.71	(0.90)
2626-2	1.32	(0.12)	23 13/16"	(605)	8"	(203)	7.51	(0.70)	2.65	(0.25)	55 9/16"	(1411)	12.19	(1.13)
2630-2	1.32	(0.12)	23 13/16"	(605)	8"	(203)	9.45	(0.88)	2.65	(0.25)	49 9/16"	(1259)	14.67	(1.36)
2916-2	1.49	(0.14)	26 13/16"	(681)	8"	(203)	4.10	(0.38)	2.98	(0.28)	67 9/16"	(1716)	7.96	(0.74)
2920-2	1.49	(0.14)	26 13/16"	(681)	8"	(203)	6.29	(0.58)	2.98	(0.28)	61 9/16"	(1564)	10.69	(0.99)
2926-2	1.49	(0.14)	26 13/16"	(681)	8"	(203)	8.48	(0.79)	2.98	(0.28)	55 9/16"	(1411)	13.42	(1.25)
2930-2	1.49	(0.14)	26 13/16"	(681)	8"	(203)	10.66	(0.99)	2.98	(0.28)	49 9/16"	(1259)	16.15	(1.50)
3016-2	1.66	(0.15)	29 13/16"	(757)	8"	(203)	4.57	(0.42)	3.31	(0.31)	67 9/16"	(1716)	8.69	(0.81)
3020-2	1.66	(0.15)	29 13/16"	(757)	8"	(203)	7.01	(0.65)	3.31	(0.31)	61 9/16"	(1564)	11.67	(1.08)
3026-2	1.66	(0.15)	29 13/16"	(757)	8"	(203)	9.45	(0.88)	3.31	(0.31)	55 9/16"	(1411)	14.65	(1.36)
3030-2	1.66	(0.15)	29 13/16"	(757)	8"	(203)	11.88	(1.10)	3.31	(0.31)	49 9/16"	(1259)	17.63	(1.64)

• "Top of Subfloor to Top of Inside Sill Stop" is calculated based upon a structural header height of 6'-10 1/2" (2096).
• Dimensions in parentheses are in millimeters or square meters.

Awning Window Details – New Construction

Scale 1 1/2" (38) = 1'-0" (305) – 1:8

1 3/8" flange setback

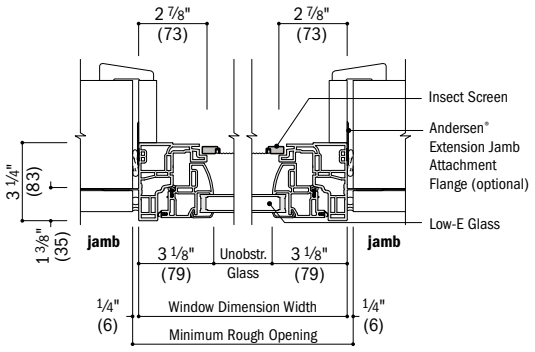

Horizontal Section

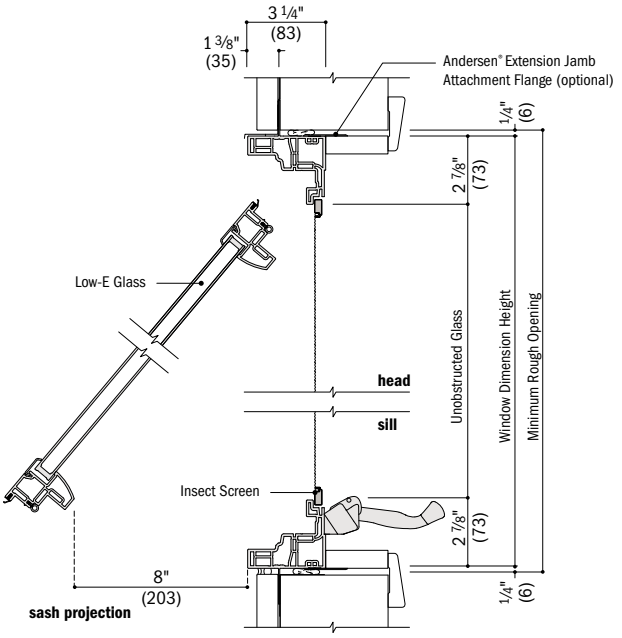

Vertical Section

1" flange setback with stucco key

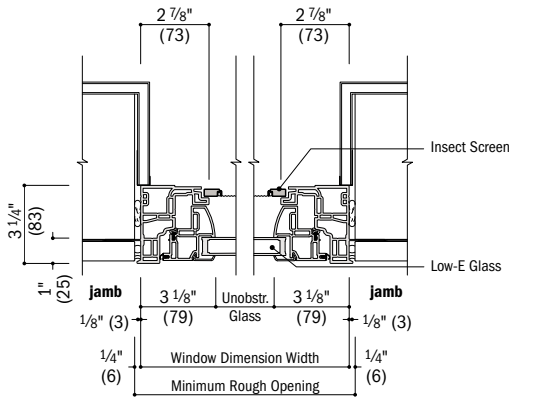

Horizontal Section
Stucco Exterior

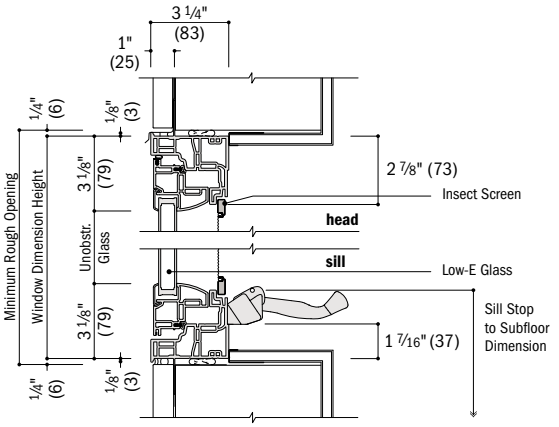

Vertical Section
Stucco Exterior

integrals

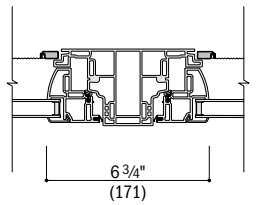

Horizontal Section
Twin Casement

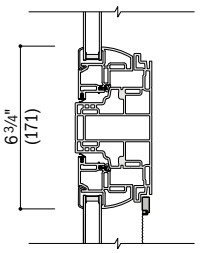

Vertical Section
Picture Over Awning

See pages 84-87 for joining details.

- Drip cap is required to complete window installation as shown but may not be included with the window. Use of drip cap is recommended for proper installation.
- Light-colored areas are parts included with window. Dark-colored areas are additional Andersen® parts required to complete window assembly as shown.
- **Minimum rough openings may need to be increased to allow for use of building wraps, flashing, sill panning, brackets, fasteners or other items. See installation information on page 110.**
- Details are for illustration only and are not intended to represent product installation methods or materials. Refer to product installation instructions at andersenwindows.com.
- Dimensions in parentheses are in millimeters.

Awning Window Details – Replacement

Scale 1 1/2" (38) = 1'-0" (305) – 1:8

no flange

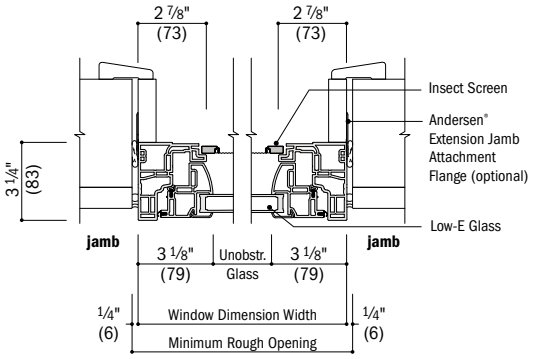

Horizontal Section
Existing Framed Opening

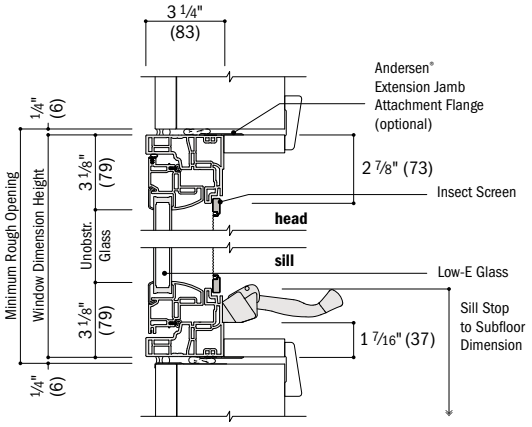

Vertical Section
Existing Framed Opening

insert

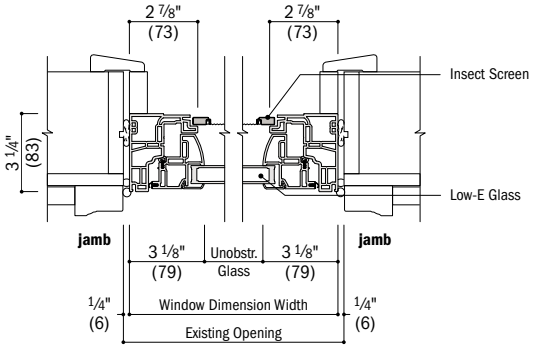

Horizontal Section
Existing Window Opening

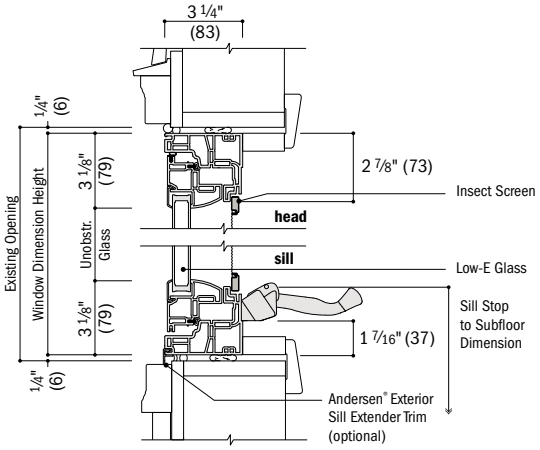

Vertical Section
Existing Window Opening

integrals

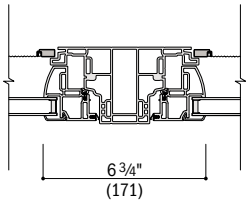

Horizontal Section
Twin Casement

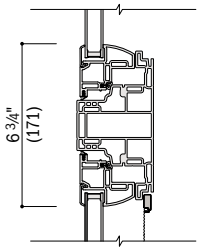

Vertical Section
Picture Over Awning

Installation accessories for insert frame shown on page 109.

See pages 84-87 for joining details.

- Drip cap is required to complete window installation as shown but may not be included with the window. Use of drip cap is recommended for proper installation.
- Light-colored areas are parts included with window. Dark-colored areas are additional Andersen® parts required to complete window assembly as shown.
- **Minimum rough openings may need to be increased to allow for use of building wraps, flashing, sill panning, brackets, fasteners or other items. See installation information on page 110.**
- Details are for illustration only and are not intended to represent product installation methods or materials. Refer to product installation instructions at andersenwindows.com.
- Dimensions in parentheses are in millimeters.

Table of Arch Single-Hung Window Sizes

Scale 1/8" (3) = 1'-0" (305) — 1:96

Window Width Dimension	1'-11 1/2" (597)	2'-5 1/2" (749)	2'-11 1/2" (902)	3'-5 1/2" (1054)
Minimum Rough Opening	2'-0" (610)	2'-6" (762)	3'-0" (914)	3'-6" (1067)
Unobstructed Glass (width of upper sash)	20" (508)	26" (660)	32" (813)	38" (965)
Unobstructed Glass (width of lower sash)	17 1/4" (438)	23 1/4" (591)	29 1/4" (743)	35 1/4" (895)
Radius	23 1/2" (597)	29 1/2" (749)	35 1/2" (902)	41 1/2" (1054)
Chord Height	3 1/8" (79)	4" (102)	4 3/4" (121)	5 1/2" (140)

Unobstructed Glass (height of lower sash shown below) — Unobstructed Glass (height of upper sash shown to right of window)

Minimum Rough Opening = Window Height + 1/2" (13)

Unobstructed Glass	Side Height	Window Height (shown left of window)	2026	2626	3026	3626
10 9/16" (268)	2'-5 1/2" (749)	2'-8 5/8" (829)	15 1/16" (383)	15 7/8" (403)	16 11/16" (424)	17 1/2" (445)
13 9/16" (345)	2'-11 1/2" (902)	3'-2 5/8" (981)	18 1/16" (459)	18 7/8" (479)	19 11/16" (500)	20 1/2" (521)
16 9/16" (421)	3'-5 1/2" (1054)	3'-8 5/8" (1133)	21 1/16" (535)	21 7/8" (556)	22 11/16" (576)	23 1/2" (597)
19 9/16" (497)	3'-11 1/2" (1207)	4'-2 5/8" (1286)	24 1/16" (611)	24 7/8" (632)	25 11/16" (652)	26 1/2" (673)
22 9/16" (573)	4'-5 1/2" (1359)	4'-8 5/8" (1438)	27 1/16" (687)	27 7/8" (708)	28 11/16" (729)	29 1/2" (749)
25 9/16" (649)	4'-11 1/2" (1511)	5'-2 5/8" (1591)	30 1/16" (764)	30 7/8" (784)	31 11/16" (805)	32 1/2" 826)
28 9/16" (726)	5'-5 1/2" (1664)	5'-8 5/8" (1743)	33 1/16" (840)	33 7/8" (860)	34 11/16" (881)	35 1/2" (902)
31 9/16" (802)	5'-11 1/2" (1816)	6'-2 5/8" (1895)	36 1/16" (916)	36 7/8" (937)	37 11/16" (957)	38 1/2" (978)
34 9/16" (878)	6'-5 1/2" (1969)	6'-8 5/8" (2048)	39 1/16" (992)	39 7/8" (1013)	40 11/16" (1033)	41 1/2" (1054)

Unobstructed Glass	Side Height	Window Height (shown left of window)	2030	2630	3030	3630
10 9/16" (268)	2'-5 1/2" (749)	2'-9 1/2" (851)	15 7/8" (403)	16 11/16" (424)	17 1/2" (445)	2'-11" (889)
13 9/16" (345)	2'-11 1/2" (902)	3'-3 1/2" (1003)	18 7/8" (479)	19 11/16" (500)	20 1/2" (521)	3'-5" (1041)
16 9/16" (421)	3'-5 1/2" (1054)	3'-9 1/2" (1156)	21 7/8" (556)	22 11/16" (576)	23 1/2" (597)	3'-11" (1194)
19 9/16" (497)	3'-11 1/2" (1207)	4'-3 1/2" (1308)	24 7/8" (632)	25 11/16" (652)	26 1/2" (673)	4'-5" (1346)
22 9/16" (573)	4'-5 1/2" (1359)	4'-9 1/2" (1461)	27 7/8" (708)	28 11/16" (729)	29 1/2" (749)	4'-11" (1499)
25 9/16" (649)	4'-11 1/2" (1511)	5'-3 1/2" (1613)	30 7/8" (784)	31 11/16" (805)	32 1/2" 826)	5'-5" (1651)
28 9/16" (726)	5'-5 1/2" (1664)	5'-9 1/2" (1765)	33 7/8" (860)	34 11/16" (881)	35 1/2" (902)	5'-11" (1803)
31 9/16" (802)	5'-11 1/2" (1816)	6'-3 1/2" (1918)	36 7/8" (937)	37 11/16" (957)	38 1/2" (978)	6'-5" (1956)
34 9/16" (878)	6'-5 1/2" (1969)	6'-9 1/2" (2070)	39 7/8" (1013)	40 11/16" (1033)	41 1/2" (1054)	6'-11" (2108)

Unobstructed Glass	Side Height	Window Height (shown left of window)	2036	2636	3036	3636
10 9/16" (268)	2'-5 1/2" (749)	2'-10 1/4" (870)	15 7/8" (403)	16 11/16" (424)	17 1/2" (445)	2'-11" (889)
13 9/16" (345)	2'-11 1/2" (902)	3'-4 1/4" (1022)	18 7/8" (479)	19 11/16" (500)	20 1/2" (521)	3'-5" (1041)
16 9/16" (421)	3'-5 1/2" (1054)	3'-10 1/4" (1175)	21 7/8" (556)	22 11/16" (576)	23 1/2" (597)	3'-11" (1194)
19 9/16" (497)	3'-11 1/2" (1207)	4'-4 1/4" (1327)	24 7/8" (632)	25 11/16" (652)	26 1/2" (673)	4'-5" (1346)
22 9/16" (573)	4'-5 1/2" (1359)	4'-10 1/4" (1480)	27 7/8" (708)	28 11/16" (729)	29 1/2" (749)	4'-11" (1499)
25 9/16" (649)	4'-11 1/2" (1511)	5'-4 1/4" (1632)	30 7/8" (784)	31 11/16" (805)	32 1/2" 826)	5'-5" (1651)
28 9/16" (726)	5'-5 1/2" (1664)	5'-10 1/4" (1784)	33 7/8" (860)	34 11/16" (881)	35 1/2" (902)	5'-11" (1803)
31 9/16" (802)	5'-11 1/2" (1816)	6'-4 1/4" (1937)	36 7/8" (937)	37 11/16" (957)	38 1/2" (978)	6'-5" (1956)
34 9/16" (878)	6'-5 1/2" (1969)	6'-10 1/4" (2089)	39 7/8" (1013)	40 11/16" (1033)	41 1/2" (1054)	6'-11" (2108)

Unobstructed Glass	Side Height	Window Height (shown left of window)	2040	2640	3040	3640
10 9/16" (268)	2'-5 1/2" (749)	2'-11" (889)	15 7/8" (403)	16 11/16" (424)	17 1/2" (445)	3'-1" (933)
13 9/16" (345)	2'-11 1/2" (902)	3'-5" (1041)	18 7/8" (479)	19 11/16" (500)	20 1/2" (521)	3'-7" (1092)
16 9/16" (421)	3'-5 1/2" (1054)	3'-11" (1194)	21 7/8" (556)	22 11/16" (576)	23 1/2" (597)	4'-1" (1244)
19 9/16" (497)	3'-11 1/2" (1207)	4'-5" (1346)	24 7/8" (632)	25 11/16" (652)	26 1/2" (673)	4'-7" (1397)
22 9/16" (573)	4'-5 1/2" (1359)	4'-11" (1499)	27 7/8" (708)	28 11/16" (729)	29 1/2" (749)	5'-1" (1549)
25 9/16" (649)	4'-11 1/2" (1511)	5'-5" (1651)	30 7/8" (784)	31 11/16" (805)	32 1/2" 826)	5'-7" (1702)
28 9/16" (726)	5'-5 1/2" (1664)	5'-11" (1803)	33 7/8" (860)	34 11/16" (881)	35 1/2" (902)	6'-1" (1854)
31 9/16" (802)	5'-11 1/2" (1816)	6'-5" (1956)	36 7/8" (937)	37 11/16" (957)	38 1/2" (978)	6'-7" (2007)
34 9/16" (878)	6'-5 1/2" (1969)	6'-11" (2108)	39 7/8" (1013)	40 11/16" (1033)	41 1/2" (1054)	7'-1" (2159)

Unobstructed Glass	Side Height	Window Height (shown left of window)	2046	2646	3046	3646
10 9/16" (268)	2'-5 1/2" (749)	2'-11" (889)	15 7/8" (403)	16 11/16" (424)	17 1/2" (445)	3'-1" (933)
13 9/16" (345)	2'-11 1/2" (902)	3'-5" (1041)	18 7/8" (479)	19 11/16" (500)	20 1/2" (521)	3'-7" (1092)
16 9/16" (421)	3'-5 1/2" (1054)	3'-11" (1194)	21 7/8" (556)	22 11/16" (576)	23 1/2" (597)	4'-1" (1244)
19 9/16" (497)	3'-11 1/2" (1207)	4'-5" (1346)	24 7/8" (632)	25 11/16" (652)	26 1/2" (673)	4'-7" (1397)
22 9/16" (573)	4'-5 1/2" (1359)	4'-11" (1499)	27 7/8" (708)	28 11/16" (729)	29 1/2" (749)	5'-1" (1549)
25 9/16" (649)	4'-11 1/2" (1511)	5'-5" (1651)	30 7/8" (784)	31 11/16" (805)	32 1/2" 826)	5'-7" (1702)
28 9/16" (726)	5'-5 1/2" (1664)	5'-11" (1803)	33 7/8" (860)	34 11/16" (881)	35 1/2" (902)	6'-1" (1854)
31 9/16" (802)	5'-11 1/2" (1816)	6'-5" (1956)	36 7/8" (937)	37 11/16" (957)	38 1/2" (978)	6'-7" (2007)
34 9/16" (878)	6'-5 1/2" (1969)	6'-11" (2108)	39 7/8" (1013)	40 11/16" (1033)	41 1/2" (1054)	7'-1" (2159)

Unobstructed Glass	Side Height	Window Height (shown left of window)	2050	2650	3050◊	3650◊
10 9/16" (268)	2'-5 1/2" (749)	2'-11" (889)	15 7/8" (403)	16 11/16" (424)	17 1/2" (445)	3'-1" (933)
13 9/16" (345)	2'-11 1/2" (902)	3'-5" (1041)	18 7/8" (479)	19 11/16" (500)	20 1/2" (521)	3'-7" (1092)
16 9/16" (421)	3'-5 1/2" (1054)	3'-11" (1194)	21 7/8" (556)	22 11/16" (576)	23 1/2" (597)	4'-1" (1244)
19 9/16" (497)	3'-11 1/2" (1207)	4'-5" (1346)	24 7/8" (632)	25 11/16" (652)	26 1/2" (673)	4'-7" (1397)
22 9/16" (573)	4'-5 1/2" (1359)	4'-11" (1499)	27 7/8" (708)	28 11/16" (729)	29 1/2" (749)	5'-1" (1549)
25 9/16" (649)	4'-11 1/2" (1511)	5'-5" (1651)	30 7/8" (784)	31 11/16" (805)	32 1/2" 826)	5'-7" (1702)
28 9/16" (726)	5'-5 1/2" (1664)	5'-11" (1803)	33 7/8" (860)	34 11/16" (881)	35 1/2" (902)	6'-1" (1854)
31 9/16" (802)	5'-11 1/2" (1816)	6'-5" (1956)	36 7/8" (937)	37 11/16" (957)	38 1/2" (978)	6'-7" (2007)
34 9/16" (878)	6'-5 1/2" (1969)	6'-11" (2108)	39 7/8" (1013)	40 11/16" (1033)	41 1/2" (1054)	7'-1" (2159)

Unobstructed Glass	Side Height	Window Height (shown left of window)	2056	2656	3056◊	3656◊
10 9/16" (268)	2'-5 1/2" (749)	2'-11" (889)	15 7/8" (403)	16 11/16" (424)	17 1/2" (445)	3'-1" (933)
13 9/16" (345)	2'-11 1/2" (902)	3'-5" (1041)	18 7/8" (479)	19 11/16" (500)	20 1/2" (521)	3'-7" (1092)
16 9/16" (421)	3'-5 1/2" (1054)	3'-11" (1194)	21 7/8" (556)	22 11/16" (576)	23 1/2" (597)	4'-1" (1244)
19 9/16" (497)	3'-11 1/2" (1207)	4'-5" (1346)	24 7/8" (632)	25 11/16" (652)	26 1/2" (673)	4'-7" (1397)
22 9/16" (573)	4'-5 1/2" (1359)	4'-11" (1499)	27 7/8" (708)	28 11/16" (729)	29 1/2" (749)	5'-1" (1549)
25 9/16" (649)	4'-11 1/2" (1511)	5'-5" (1651)	30 7/8" (784)	31 11/16" (805)	32 1/2" 826)	5'-7" (1702)
28 9/16" (726)	5'-5 1/2" (1664)	5'-11" (1803)	33 7/8" (860)	34 11/16" (881)	35 1/2" (902)	6'-1" (1854)
31 9/16" (802)	5'-11 1/2" (1816)	6'-5" (1956)	36 7/8" (937)	37 11/16" (957)	38 1/2" (978)	6'-7" (2007)
34 9/16" (878)	6'-5 1/2" (1969)	6'-11" (2108)	39 7/8" (1013)	40 11/16" (1033)	41 1/2" (1054)	7'-1" (2159)

Unobstructed Glass	Side Height	Window Height (shown left of window)	2060	2660◊	3060◊	3660◊
10 9/16" (268)	2'-5 1/2" (749)	2'-11" (889)	15 7/8" (403)	16 11/16" (424)	17 1/2" (445)	3'-1" (933)
13 9/16" (345)	2'-11 1/2" (902)	3'-5" (1041)	18 7/8" (479)	19 11/16" (500)	20 1/2" (521)	3'-7" (1092)
16 9/16" (421)	3'-5 1/2" (1054)	3'-11" (1194)	21 7/8" (556)	22 11/16" (576)	23 1/2" (597)	4'-1" (1244)
19 9/16" (497)	3'-11 1/2" (1207)	4'-5" (1346)	24 7/8" (632)	25 11/16" (652)	26 1/2" (673)	4'-7" (1397)
22 9/16" (573)	4'-5 1/2" (1359)	4'-11" (1499)	27 7/8" (708)	28 11/16" (729)	29 1/2" (749)	5'-1" (1549)
25 9/16" (649)	4'-11 1/2" (1511)	5'-5" (1651)	30 7/8" (784)	31 11/16" (805)	32 1/2" 826)	5'-7" (1702)
28 9/16" (726)	5'-5 1/2" (1664)	5'-11" (1803)	33 7/8" (860)	34 11/16" (881)	35 1/2" (902)	6'-1" (1854)
31 9/16" (802)	5'-11 1/2" (1816)	6'-5" (1956)	36 7/8" (937)	37 11/16" (957)	38 1/2" (978)	6'-7" (2007)
34 9/16" (878)	6'-5 1/2" (1969)	6'-11" (2108)	39 7/8" (1013)	40 11/16" (1033)	41 1/2" (1054)	7'-1" (2159)

Unobstructed Glass	Side Height	Window Height (shown left of window)	2066	2666◊	3066◊	3666◊
10 9/16" (268)	2'-5 1/2" (749)	2'-11" (889)	15 7/8" (403)	16 11/16" (424)	17 1/2" (445)	3'-1" (933)
13 9/16" (345)	2'-11 1/2" (902)	3'-5" (1041)	18 7/8" (479)	19 11/16" (500)	20 1/2" (521)	3'-7" (1092)
16 9/16" (421)	3'-5 1/2" (1054)	3'-11" (1194)	21 7/8" (556)	22 11/16" (576)	23 1/2" (597)	4'-1" (1244)
19 9/16" (497)	3'-11 1/2" (1207)	4'-5" (1346)	24 7/8" (632)	25 11/16" (652)	26 1/2" (673)	4'-7" (1397)
22 9/16" (573)	4'-5 1/2" (1359)	4'-11" (1499)	27 7/8" (708)	28 11/16" (729)	29 1/2" (749)	5'-1" (1549)
25 9/16" (649)	4'-11 1/2" (1511)	5'-5" (1651)	30 7/8" (784)	31 11/16" (805)	32 1/2" 826)	5'-7" (1702)
28 9/16" (726)	5'-5 1/2" (1664)	5'-11" (1803)	33 7/8" (860)	34 11/16" (881)	35 1/2" (902)	6'-1" (1854)
31 9/16" (802)	5'-11 1/2" (1816)	6'-5" (1956)	36 7/8" (937)	37 11/16" (957)	38 1/2" (978)	6'-7" (2007)
34 9/16" (878)	6'-5 1/2" (1969)	6'-11" (2108)	39 7/8" (1013)	40 11/16" (1033)	41 1/2" (1054)	7'-1" (2159)

continued on next page

Custom-size windows are available in 1/8" (3) increments. Contact your Andersen supplier for more information.

For arch single-hung windows, the size designation does not reflect the overall window height (e.g., a 2026 window size has a side height of 2'-5 1/2" and an overall window height of 2'-8 5/8").

Height dimensions for upper sash are to the right of each window size and lower sash are to the far left.

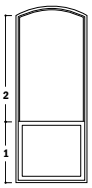

Windows with a side height greater than 6'-5 1/2" (1969) are only available with a 2:1 reverse cottage sash ratio.*

Details are shown on pages 48-49. Grille patterns shown on page 47.

• "Window Dimension" always refers to outside frame-to-frame dimension.
• **"Minimum Rough Opening" dimensions may need to be increased to allow for use of building wraps, flashing, sill panning, brackets, fasteners or other items. See page 110 for more details.**
• Dimensions in parentheses are in millimeters.
◊Meets or exceed clear opening area of 5.7 sq.ft. or 0.53 m², clear opening width of 20" (508) and clear opening height of 24" (610). See table on pages 31 and 33.
*For side heights greater than 6'-5 1/2" (1969), meeting rail location = (side height in inches x 0.33) + 1.96".

Table of Arch Single-Hung Window Sizes *(continued)*

Scale 1/8" (3) = 1'-0" (305) – 1:96

Window Width Dimension	1'-11 1/2" (597)	2'-5 1/2" (749)	2'-11 1/2" (902)	3'-5 1/2" (1054)
Minimum Rough Opening	2'-0" (610)	2'-6" (762)	3'-0" (914)	3'-6" (1067)
Unobstructed Glass (width of upper sash)	20" (508)	26" (660)	32" (813)	38" (965)
Unobstructed Glass (width of lower sash)	17 1/4" (438)	23 1/4" (591)	29 1/4" (743)	35 1/4" (895)
Radius	23 1/2" (597)	29 1/2" (749)	35 1/2" (902)	41 1/2" (1054)

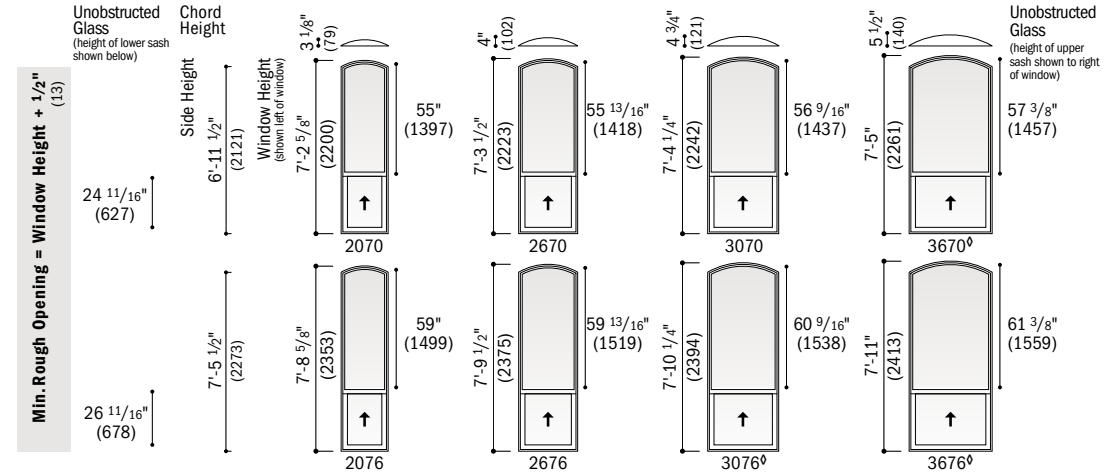

Notes on previous page also apply to this page.

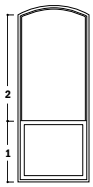

Windows with a side height greater than 6'-5 1/2" (1969) are only available with a 2:1 reverse cottage sash ratio.*

- "Window Dimension" always refers to outside frame-to-frame dimension.
- **"Minimum Rough Opening" dimensions may need to be increased to allow for use of building wraps, flashing, sill panning, brackets, fasteners or other items. See page 110 for more details.**
- Dimensions in parentheses are in millimeters.

◊Meets or exceed clear opening area of 5.7 sq. ft. or 0.53 m², clear opening width of 20" (508) and clear opening height of 24" (610). See table on pages 31 and 33.

*For side heights greater than 6'-5 1/2" (1969), meeting rail location = (side height in inches x 0.33) + 1.96".

Arch Single-Hung Window Opening and Area Specifications

Window Number	Clear Opening Area Sq. Ft./(m²)	Clear Opening in Full Open Position: Width Inches/(mm)	Clear Opening in Full Open Position: Height Inches/(mm)	Glass Area Sq. Ft./(m²)	Vent Area Sq. Ft./(m²)	Top of Subfloor to Top of Inside Sill Stop Inches/(mm)	Overall Window Area Sq. Ft./(m²)
2026	1.53 (0.14)	20" (508)	11 1/16" (280)	3.25 (0.30)	1.53 (0.14)	51 3/8" (1304)	5.16 (0.48)
2030	1.95 (0.18)	20" (508)	14 1/16" (357)	4.03 (0.37)	1.95 (0.18)	45 3/8" (1152)	6.14 (0.57)
2036	2.37 (0.22)	20" (508)	17 1/16" (433)	4.80 (0.45)	2.37 (0.22)	39 3/8" (1000)	7.12 (0.66)
2040	2.78 (0.26)	20" (508)	20 1/16" (509)	5.58 (0.52)	2.78 (0.26)	33 3/8" (847)	8.10 (0.75)
2046	3.20 (0.30)	20" (508)	23 1/16" (585)	6.36 (0.59)	3.20 (0.30)	27 3/8" (695)	9.08 (0.84)
2050	3.62 (0.34)	20" (508)	26 1/16" (661)	7.13 (0.66)	3.62 (0.34)	21 3/8" (542)	10.06 (0.93)
2056	4.03 (0.37)	20" (508)	29 1/16" (738)	7.91 (0.73)	4.03 (0.37)	15 3/8" (390)	11.04 (1.03)
2060	4.45 (0.41)	20" (508)	32 1/16" (814)	8.68 (0.81)	4.45 (0.41)	9 3/8" (238)	12.02 (1.12)
2066	4.87 (0.45)	20" (508)	35 1/16" (890)	9.46 (0.88)	4.87 (0.45)	16 7/8"** (429)**	12.99 (1.21)
2070*	3.48 (0.32)	20" (508)	25 1/16" (636)	10.48 (0.97)	3.48 (0.32)	10 7/8"** (276)**	13.97 (1.30)
2076*	3.76 (0.35)	20" (508)	27 1/16" (687)	11.28 (1.05)	3.76 (0.35)	4 7/8"** (124)**	14.95 (1.39)
2626	1.99 (0.19)	26" (660)	11 1/16" (280)	4.39 (0.41)	1.99 (0.19)	50 9/16" (1284)	6.59 (0.61)
2630	2.53 (0.24)	26" (660)	14 1/16" (357)	5.41 (0.50)	2.53 (0.24)	44 9/16" (1132)	7.82 (0.73)
2636	3.08 (0.29)	26" (660)	17 1/16" (433)	6.44 (0.60)	3.08 (0.29)	38 9/16" (979)	9.05 (0.84)
2640	3.62 (0.34)	26" (660)	20 1/16" (509)	7.46 (0.69)	3.62 (0.34)	32 9/16" (827)	10.28 (0.95)
2646	4.16 (0.39)	26" (660)	23 1/16" (585)	8.49 (0.79)	4.16 (0.39)	26 9/16" (674)	11.51 (1.07)
2650	4.70 (0.44)	26" (660)	26 1/16" (661)	9.52 (0.88)	4.70 (0.44)	20 9/16" (522)	12.74 (1.18)
2656	5.24 (0.49)	26" (660)	29 1/16" (738)	10.54 (0.98)	5.24 (0.49)	14 9/16" (370)	13.97 (1.30)
2660◊	5.78 (0.54)	26" (660)	32 1/16" (814)	11.57 (1.07)	5.78 (0.54)	8 9/16" (217)	15.20 (1.41)
2666◊	6.33 (0.59)	26" (660)	35 1/16" (890)	12.59 (1.17)	6.33 (0.59)	16 1/16"** (429)**	16.42 (1.53)
2670*	4.52 (0.42)	26" (660)	25 1/16" (636)	13.87 (1.29)	4.52 (0.42)	10 1/16"** (256)**	17.65 (1.64)
2676*	4.88 (0.45)	26" (660)	27 1/16" (687)	14.91 (1.39)	4.88 (0.45)	4 1/16"** (103)**	18.88 (1.75)
3026	2.45 (0.23)	32" (813)	11 1/16" (280)	5.57 (0.52)	2.45 (0.23)	49 3/4" (1263)	8.07 (0.75)
3030	3.12 (0.29)	32" (813)	14 1/16" (357)	6.84 (0.64)	3.12 (0.29)	43 3/4" (1111)	9.54 (0.89)

continued on page 33

- "Top of Subfloor to Top of Inside Sill Stop" is calculated based upon a structural header height of 6'-10 1/2" (2096) except for XX66, XX70 and XX76 heights, which are calculated using a header height of 8' (2438).
- Dimensions in parentheses are in millimeters or square meters.

◊Meets or exceed clear opening area of 5.7 sq. ft. or 0.53 m², clear opening width of 20" (508) and clear opening height of 24" (610).

*Available only with a 2:1 reverse cottage sash ratio.

**Calculated based upon a structural header height of 8' (2438).

Table of Single-Hung Window Sizes

Scale 1/8" (3) = 1'-0" (305) – 1:96

Window Dimension	1'-5 1/2" (445)	1'-11 1/2" (597)	2'-5 1/2" (749)	2'-11 1/2" (902)	3'-5 1/2" (1054)	3'-11 1/2" (1207)
Minimum Rough Opening	1'-6" (457)	2'-0" (610)	2'-6" (762)	3'-0" (914)	3'-6" (1067)	4'-0" (1219)
Unobstructed Glass (height of single sash)	11 1/4" (286)	17 1/4" (438)	23 1/4" (591)	29 1/4" (743)	35 1/4" (895)	41 1/4" (1048)

Reverse cottage sash is available based on a 3:2 ratio. Available in standard widths for the heights shown below.

REVERSE COTTAGE CUSTOM WIDTHS – 17 1/2" (445) **to 47 1/2"** (1207)

REVERSE COTTAGE CUSTOM HEIGHTS – 29 1/2" (749) **to 77 1/2"** (1969)

CUSTOM WIDTHS – 17 1/2" to **47 1/2"**

CUSTOM HEIGHTS – 23 1/2" to **77 1/2"**

Height	Width 1'-5 1/2" (445)	Width 1'-11 1/2" (597)	Width 2'-5 1/2" (749)	Width 2'-11 1/2" (902)	Width 3'-5 1/2" (1054)	Width 3'-11 1/2" (1207)	Reverse Cottage*
1'-11 1/2" (597) 2'-0" (610) 7 9/16" (192)	1620	2020	2620	3020	3620	4020	
2'-5 1/2" (749) 2'-6" (762) 10 9/16" (268)	1626	2026	2626	3026	3626	4026	3 2 Reverse Cottage*
2'-11 1/2" (902) 3'-0" (914) 13 9/16" (345)	1630	2030	2630	3030	3630	4030	
3'-5 1/2" (1054) 3'-6" (1067) 16 9/16" (421)	1636	2036	2636	3036	3636	4036	
3'-11 1/2" (1207) 4'-0" (1219) 19 9/16" (497)	1640	2040	2640	3040	3640	4040	
4'-5 1/2" (1359) 4'-6" (1372) 22 9/16" (573)	1646	2046	2646	3046	3646	4046	
4'-11 1/2" (1511) 5'-0" (1524) 25 9/16" (649)	1650	2050	2650†	3050◊†	3650◊†	4050◊†	
5'-5 1/2" (1664) 5'-6" (1676) 28 9/16" (726)	1656	2056	2656†	3056◊†	3656◊†	4056◊†	
5'-11 1/2" (1816) 6'-0" (1829) 31 9/16" (802)	1660	2060	2660◊†	3060◊†	3660◊†	4060◊†	
6'-5 1/2" (1969) 6'-6" (1981) 34 9/16" (878)	1666	2066	2666◊†	3066◊†	3666◊†	4066◊†	
6'-11 1/2" (2121) 7'-0" (2134) 50 7/16" (1282) – 24 5/8" (626) **CUSTOM HEIGHTS**	1670	2070	2670†	3070†	3670◊†	4070◊†	

continued on next page

Custom-size windows are available in 1/8" (3) increments. See page 89 for custom sizes and specifications.

For construction site convenience, an optional drywall pass-through window is available for removal and reinstallation of the upper and lower sash.

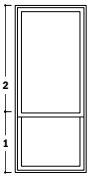

Windows with a height greater than 6'-5 1/2" (1969) are only available with a 2:1 reverse cottage sash ratio.** Size tables for all windows with reverse cottage sash are available on **andersenwindows.com**.

Details shown on pages 50-51.

Grille patterns shown on page 47.

- "Window Dimension" always refers to outside frame-to-frame dimension.
- "**Minimum Rough Opening**" **dimensions may need to be increased to allow for use of building wraps, flashing, sill panning, brackets, fasteners or other items. See page 110 for more details.**
- Dimensions in parentheses are in millimeters.

◊Meets or exceed clear opening area of 5.7 sq. ft. or 0.53 m², clear opening width of 20" (508) and clear opening height of 24" (610). See table on page 39.

†Drywall pass-through window available for these standard and reverse cottage sizes and for custom-size windows wider than 1'-11 1/2" (597) and taller than 4'-5 1/2" (1359).

*For reverse cottage sash windows, meeting rail location = (window height in inches x 0.40) + 1.96".

**For heights greater than 6'-5 1/2" (1969), meeting rail location = (window height in inches x 0.33) + 1.96".

Table of Single-Hung Window Sizes *(continued)*

Scale 1/8" (3) = 1'-0" (305) – 1:96

Window Dimension	1'-5 1/2" (445)	1'-11 1/2" (597)	2'-5 1/2" (749)	2'-11 1/2" (902)	3'-5 1/2" (1054)	3'-11 1/2" (1207)
Minimum Rough Opening	1'-6" (457)	2'-0" (610)	2'-6" (762)	3'-0" (914)	3'-6" (1067)	4'-0" (1219)
Unobstructed Glass	11 1/4" (286)	17 1/4" (438)	23 1/4" (591)	29 1/4" (743)	35 1/4" (895)	41 1/4" (1048)

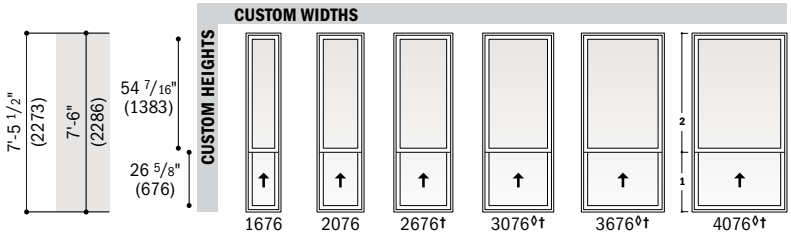

Notes on previous page also apply to this page.

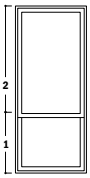

Windows with a height greater than 6'-5 1/2" (1969) are only available with a 2:1 reverse cottage sash ratio.* Size tables for all windows with reverse cottage sash are available on **andersenwindows.com**.

- "Window Dimension" always refers to outside frame-to-frame dimension.
- "**Minimum Rough Opening**" **dimensions may need to be increased to allow for use of building wraps, flashing, sill panning, brackets, fasteners or other items. See page 110 for more details.**
- Dimensions in parentheses are in millimeters.

◊Meets or exceed clear opening area of 5.7 sq.ft. or 0.53 m², clear opening width of 20" (508) and clear opening height of 24" (610). See table on bottom of this page≠≠.
†Drywall pass-through window available for these standard and reverse cottage sizes and for custom-size windows wider than 1'-11 1/2" (597) and taller than 4'-5 1/2" (1359).
*For heights greater than 6'-5 1/2" (1969), meeting rail location = (window height in inches x 0.33) + 1.96".

Arch Single-Hung Window Opening and Area Specifications *(continued from page 31)*

Window Number	Clear Opening Area Sq. Ft./(m²)	Clear Opening in Full Open Position: Width Inches/(mm)	Clear Opening in Full Open Position: Height Inches/(mm)	Glass Area Sq. Ft./(m²)	Vent Area Sq. Ft./(m²)	Top of Subfloor to Top of Inside Sill Stop Inches/(mm)	Overall Window Area Sq. Ft./(m²)
3036	3.79 (0.35)	32" (813)	17 1/16" (433)	8.12 (0.75)	3.79 (0.35)	37 3/4" (959)	11.02 (1.02)
3040	4.45 (0.41)	32" (813)	20 1/16" (509)	9.39 (0.87)	4.45 (0.41)	31 3/4" (806)	12.50 (1.16)
3046	5.12 (0.48)	32" (813)	23 1/16" (585)	10.67 (0.99)	5.12 (0.48)	25 3/4" (654)	13.98 (1.30)
3050 ◊	5.79 (0.54)	32" (813)	26 1/16" (661)	11.95 (1.11)	5.79 (0.54)	19 3/4" (501)	15.46 (1.44)
3056 ◊	6.45 (0.60)	32" (813)	29 1/16" (738)	13.22 (1.23)	6.45 (0.60)	13 3/4" (349)	16.94 (1.57)
3060 ◊	7.12 (0.66)	32" (813)	32 1/16" (814)	14.50 (1.35)	7.12 (0.66)	7 3/4" (197)	18.42 (1.71)
3066 ◊	7.79 (0.72)	32" (813)	35 1/16" (890)	15.77 (1.47)	7.79 (0.72)	15 1/4"** (387)**	19.90 (1.85)
3070*	5.56 (0.52)	32" (813)	25 1/16" (636)	17.30 (1.61)	5.56 (0.52)	9 1/4"** (235)**	21.38 (1.99)
3076 ◊*	6.01 (0.56)	32" (813)	27 1/16" (687)	18.59 (1.73)	6.01 (0.56)	3 1/4"** (83)**	22.86 (2.12)
3626	2.91 (0.27)	38" (965)	11 1/16" (280)	6.79 (0.63)	2.91 (0.27)	48 15/16" (1243)	9.59 (0.89)
3630	3.70 (0.34)	38" (965)	14 1/16" (357)	8.32 (0.77)	3.70 (0.34)	42 15/16" (1091)	11.31 (1.05)
3636	4.50 (0.42)	38" (965)	17 1/16" (433)	9.84 (0.91)	4.50 (0.42)	36 15/16" (938)	13.04 (1.21)
3640	5.29 (0.49)	38" (965)	20 1/16" (509)	11.37 (1.06)	5.29 (0.49)	30 15/16" (786)	14.77 (1.37)
3646	6.08 (0.56)	38" (965)	23 1/16" (585)	12.89 (1.20)	6.08 (0.56)	24 15/16" (633)	16.50 (1.53)
3650 ◊	6.87 (0.64)	38" (965)	26 1/16" (661)	14.42 (1.34)	6.87 (0.64)	18 15/16" (481)	18.23 (1.69)
3656 ◊	7.66 (0.71)	38" (965)	29 1/16" (738)	15.95 (1.48)	7.66 (0.71)	12 15/16" (329)	19.96 (1.85)
3660 ◊	8.45 (0.79)	38" (965)	32 1/16" (814)	17.47 (1.62)	8.45 (0.79)	6 15/16" (176)	21.69 (2.02)
3666 ◊	9.25 (0.86)	38" (965)	35 1/16" (890)	19.00 (1.77)	9.25 (0.86)	14 7/16"** (367)**	23.42 (2.18)
3670 ◊*	6.61 (0.61)	38" (965)	25 1/16" (636)	20.77 (1.93)	6.61 (0.61)	8 7/16"** (214)**	25.15 (2.34)
3676 ◊*	7.14 (0.66)	38" (965)	27 1/16" (687)	22.32 (2.07)	7.14 (0.66)	2 7/16"** (62)**	26.88 (2.50)

- "Top of Subfloor to Top of Inside Sill Stop" is calculated based upon a structural header height of 6'-10 1/2" (2096) except for XX66, XX70 and XX76 heights, which are calculated using a header height of 8' (2438).
- Dimensions in parentheses are in millimeters or square meters.

◊Meets or exceed clear opening area of 5.7 sq.ft. or 0.53 m², clear opening width of 20" (508) and clear opening height of 24" (610).
*Available only with a 2:1 reverse cottage sash ratio.
**Calculated based upon a structural header height of 8' (2438).

Single-Hung Window Opening and Area Specifications

Window Number	Clear Opening Area Sq. Ft./(m²)	Clear Opening in Full Open Position: Width Inches/(mm)	Clear Opening in Full Open Position: Height Inches/(mm)	Glass Area Sq. Ft./(m²)	Vent Area Sq. Ft./(m²)	Top of Subfloor to Top of Inside Sill Stop Inches/(mm)	Overall Window Area Sq. Ft./(m²)
1620	0.78 (0.07)	14" (356)	8 1/16" (204)	1.18 (0.11)	0.78 (0.07)	60 1/2" (1537)	2.86 (0.27)
1626	1.07 (0.10)	14" (356)	11 1/16" (280)	1.65 (0.15)	1.07 (0.10)	54 1/2" (1384)	3.59 (0.33)
1630	1.37 (0.13)	14" (356)	14 1/16" (357)	2.12 (0.20)	1.37 (0.13)	48 1/2" (1232)	4.31 (0.40)
1636	1.66 (0.15)	14" (356)	17 1/16" (433)	2.59 (0.24)	1.66 (0.15)	42 1/2" (1080)	5.04 (0.47)
1640	1.95 (0.18)	14" (356)	20 1/16" (509)	3.05 (0.28)	1.95 (0.18)	36 1/2" (927)	5.77 (0.54)
1646	2.24 (0.21)	14" (356)	23 1/16" (585)	3.52 (0.33)	2.24 (0.21)	30 1/2" (775)	6.50 (0.60)
1650	2.53 (0.24)	14" (356)	26 1/16" (661)	3.99 (0.37)	2.53 (0.24)	24 1/2" (622)	7.23 (0.67)
1656	2.82 (0.26)	14" (356)	29 1/16" (738)	4.46 (0.41)	2.82 (0.26)	18 1/2" (470)	7.96 (0.74)
1660	3.12 (0.29)	14" (356)	32 1/16" (814)	4.93 (0.46)	3.12 (0.29)	12 1/2" (318)	8.69 (0.81)
1666	3.41 (0.32)	14" (356)	35 1/16" (890)	5.40 (0.50)	3.41 (0.32)	6 1/2" (165)	9.42 (0.88)
1670*	2.43 (0.23)	14" (356)	25 1/16" (636)	5.87 (0.55)	2.43 (0.23)	14"** (356)**	10.15 (0.94)

continued on page 39

For reverse cottage, twin and triple single-hung window specifications, see pages 41, 43 and 45.

- "Top of Subfloor to Top of Inside Sill Stop" is calculated based upon a structural header height of 6'-10 1/2" (2096) except for XX70 and XX76 heights, which are calculated using a header height of 8' (2438).
- Dimensions in parentheses are in millimeters or square meters.

◊Meets or exceed clear opening area of 5.7 sq.ft. or 0.53 m², clear opening width of 20" (508) and clear opening height of 24" (610).
*Available only with a 2:1 reverse cottage sash ratio.
**Calculated based upon a structural header height of 8' (2438).

Table of Twin and Triple Single-Hung Window Sizes

Scale 1/8" (3) = 1'-0" (305) — 1:96

Notes on next page also apply to this page.

Window Dimension	2'-11 1/2" (902)	3'-11 1/2" (1207)	4'-11 1/2" (1511)	5'-11 1/2" (1816)	6'-11 1/2" (2121)	7'-11 1/2" (2426)	4'-5 1/2" (1359)
Minimum Rough Opening	3'-0" (914)	4'-0" (1219)	5'-0" (1524)	6'-0" (1829)	7'-0" (2134)	8'-0" (2438)	4'-6" (1372)
Unobstructed Glass (width of single sash)	11 1/4" (286)	17 1/4" (438)	23 1/4" (591)	29 1/4" (743)	35 1/4" (895)	41 1/4" (1048)	11 1/4" (286)

CUSTOM WIDTHS TWIN — 35 1/2" to 95 1/2"

CUSTOM HEIGHTS — 23 1/2" to 71 1/2"

11 1/2" (292) 1'-0" (305) 5 1/4" (133)	1610-2	2010-2	2610-2	3010-2	3610-2	4010-2	1610-3
1'-5 1/2" (445) 1'-6" (457) 11 1/4" (286)	1616-2	2016-2	2616-2	3016-2	3616-2	4016-2	1616-3
1'-11 1/2" (597) 2'-0" (610) 17 1/4" (438)	1620-2	2020-2	2620-2	3020-2	3620-2	4020-2	1620-3
1'-11 1/2" (597) 2'-0" (610) 7 9/16" (192)	1620-2	2020-2	2620-2	3020-2	3620-2	4020-2	1620-3
2'-5 1/2" (749) 2'-6" (762) 10 9/16" (268)	1626-2	2026-2	2626-2	3026-2	3626-2	4026-2	1626-3
2'-11 1/2" (902) 3'-0" (914) 13 9/16" (345)	1630-2	2030-2	2630-2	3030-2	3630-2	4030-2	1630-3
3'-5 1/2" (1054) 3'-6" (1067) 16 9/16" (421)	1636-2	2036-2	2636-2	3036-2	3636-2	4036-2	1636-3
3'-11 1/2" (1207) 4'-0" (1219) 19 9/16" (497)	1640-2	2040-2	2640-2	3040-2	3640-2	4040-2	1640-3
4'-5 1/2" (1359) 4'-6" (1372) 22 9/16" (573)	1646-2	2046-2	2646-2	3046-2	3646-2	4046-2	1646-3
4'-11 1/2" (1511) 5'-0" (1524) 25 9/16" (649)	1650-2	2050-2	2650-2	3050-2◊	3650-2◊	4050-2◊	1650-3
5'-5 1/2" (1664) 5'-6" (1676) 28 9/16" (726)	1656-2	2056-2	2656-2	3056-2◊	3656-2◊	4056-2◊	1656-3
5'-11 1/2" (1816) 6'-0" (1829) 31 9/16" (802)	1660-2	2060-2	2660-2◊	3060-2◊	3660-2◊	4060-2◊	1660-3

- "Window Dimension" always refers to outside frame-to-frame dimension.
- "**Minimum Rough Opening**" **dimensions may need to be increased to allow for use of building wraps, flashing, sill panning, brackets, fasteners or other items. See page 110 for more details.**
- Dimensions in parentheses are in millimeters.

◊Meets or exceed clear opening area of 5.7 sq. ft. 0.53 m², clear opening width of 20" (508) and clear opening height of 24" (610). See tables on pages 43 and 45.

5'-11 1/2"	7'-5 1/2"	8'-11 1/2"	10'-5 1/2"	11'-11 1/2"
(1816)	(2273)	(2731)	(3188)	(3645)
6'-0"	7'-6"	9'-0"	10'-6"	12'-0"
(1829)	(2286)	(2743)	(3200)	(3658)
17 1/4"	23 1/4"	29 1/4"	35 1/4"	41 1/4"
(438)	(591)	(743)	(895)	(1048)

CUSTOM WIDTHS TRIPLE – 53 1/2" to 143 1/2"

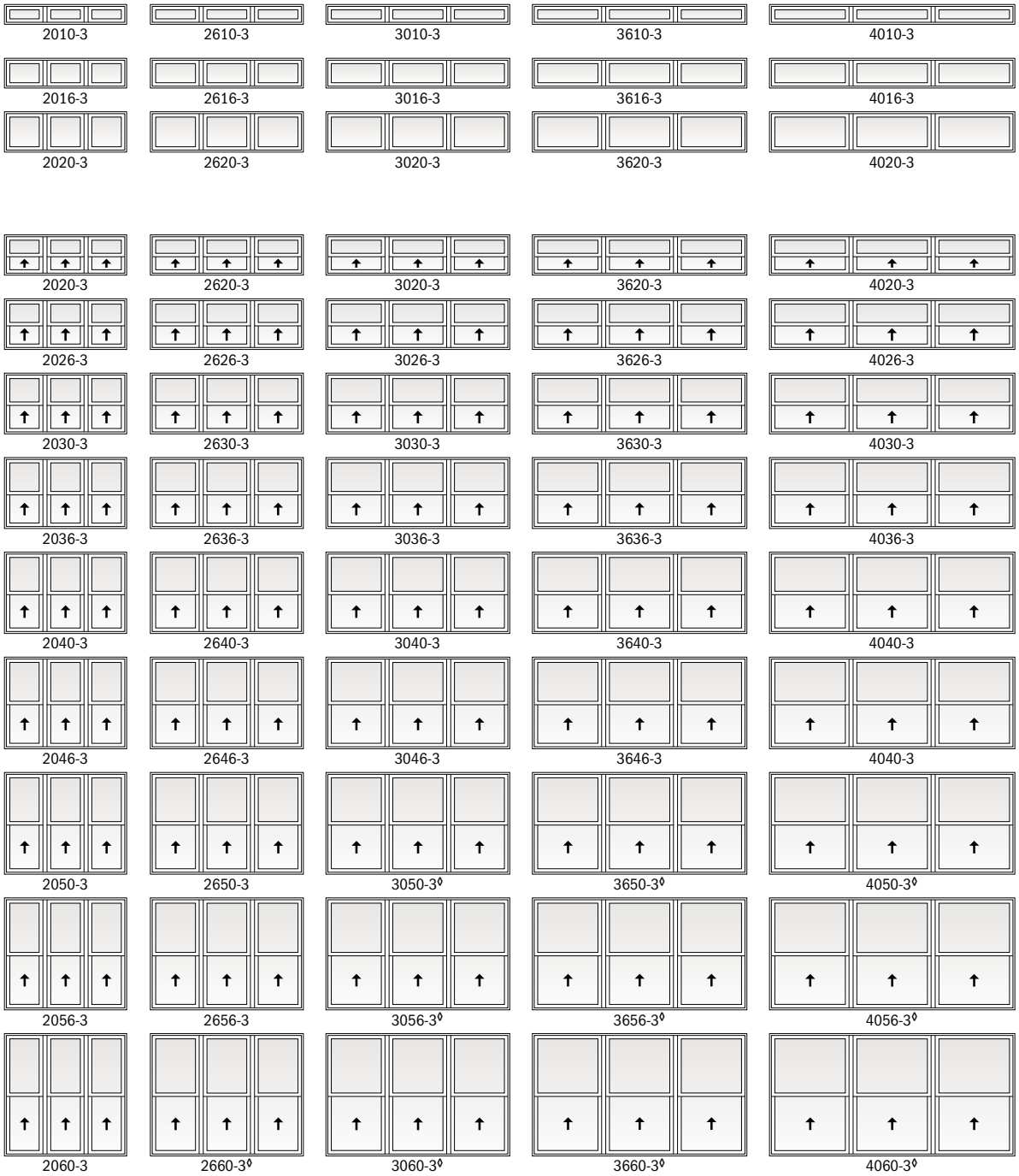

Custom-size windows are available in 1/8" (3) increments. See page 89 for custom sizes and specifications.

Windows have one continuous outer frame.

Twin and triple transoms are also shown. See pages 70-71 for more information.

Details shown on pages 50-51. Grille patterns shown on page 47.

• "Window Dimension" always refers to outside frame-to-frame dimension.
• "**Minimum Rough Opening**" **dimensions may need to be increased to allow for use of building wraps, flashing, sill panning, brackets, fasteners or other items. See page 110 for more details.**
• Dimensions in parentheses are in millimeters.
◊Meets or exceed clear opening area of 5.7 sq. ft. or 0.53 m², clear opening width of 20" (508) and clear opening height of 24" (610). See tables on pages 43 and 45.

Table of Sizes – 10-High Transom Window Over Single-Hung

Scale 1/8" (3) = 1'-0" (305) — 1:96

Window Dimension	1'-5 1/2" (445)	1'-11 1/2" (597)	2'-5 1/2" (749)	2'-11 1/2" (902)	3'-5 1/2" (1054)	3'-11 1/2" (1207)
Minimum Rough Opening	1'-6" (457)	2'-0" (610)	2'-6" (762)	3'-0" (914)	3'-6" (1067)	4'-0" (1219)
Unobstructed Glass (height of individual single-hung sash only)	11 1/4" (286)	17 1/4" (438)	23 1/4" (591)	29 1/4" (743)	35 1/4" (895)	41 1/4" (1048)
3'-11 1/2" (1207) / 4'-0" (1219) / 13 9/16" (345)	1610 1630	2010 2030	2610 2630	3010 3030	3610 3630	4010 4030
4'-5 1/2" (1359) / 4'-6" (1372) / 16 9/16" (421)	1610 1636	2010 2036	2610 2636	3010 3036	3610 3636	4010 4036
4'-11 1/2" (1511) / 5'-0" (1524) / 19 9/16" (497)	1610 1640	2010 2040	2610 2640	3010 3040	3610 3640	4010 4040
5'-5 1/2" (1664) / 5'-6" (1676) / 22 9/16" (573)	1610 1646	2010 2046	2610 2646	3010 3046	3610 3646	4010 4046
5'-11 1/2" (1816) / 6'-0" (1829) / 25 9/16" (649)	1610 1650	2010 2050	2610 2650	3010 3050◊	3610 3650◊	4010 4050◊
6'-5 1/2" (1969) / 6'-6" (1981) / 28 9/16" (726)	1610 1656	2010 2056	2610 2656	3010 3056◊	3610 3656◊	4010 4056◊
6'-11 1/2" (2121) / 7'-0" (2134) / 31 9/16" (802)	1610 1660	2010 2060	2610 2660◊	3010 3060◊	3610 3660◊	4010 4060◊

Windows have one continuous outer frame.

Unobstructed glass height dimension of upper transom sash is 5 1/4" (133).

Details shown on pages 50-51.

Grille patterns shown on page 47.

• "Window Dimension" always refers to outside frame-to-frame dimension.
• "**Minimum Rough Opening**" **dimensions may need to be increased to allow for use of building wraps, flashing, sill panning, brackets, fasteners or other items. See page 110 for more details.**
• Dimensions in parentheses are in millimeters.
◊Meets or exceed clear opening area of 5.7 sq.ft. or 0.53 m², clear opening width of 20" (508) and clear opening height of 24" (610).

Table of Sizes – 16-High Transom Window Over Single-Hung

Scale 1/8" (3) = 1'-0" (305) – 1:96

Window Dimension	1'-5 1/2" (445)	1'-11 1/2" (597)	2'-5 1/2" (749)	2'-11 1/2" (902)	3'-5 1/2" (1054)	3'-11 1/2" (1207)
Minimum Rough Opening	1'-6" (457)	2'-0" (610)	2'-6" (762)	3'-0" (914)	3'-6" (1067)	4'-0" (1219)
Unobstructed Glass (height of individual single-hung sash only)	11 1/4" (286)	17 1/4" (438)	23 1/4" (591)	29 1/4" (743)	35 1/4" (895)	41 1/4" (1048)

4'-5 1/2" (1359) × 4'-6" (1372) × 13 9/16" (345)	1616 1630	2016 2030	2616 2630	3016 3030	3616 3630	4016 4030
4'-11 1/2" (1511) × 5'-0" (1524) × 16 9/16" (421)	1616 1636	2016 2036	2616 2636	3016 3036	3616 3636	4016 4036
5'-5 1/2" (1664) × 5'-6" (1676) × 19 9/16" (497)	1616 1640	2016 2040	2616 2640	3016 3040	3616 3640	4016 4040
5'-11 1/2" (1816) × 6'-0" (1829) × 22 9/16" (573)	1616 1646	2016 2046	2616 2646	3016 3046	3616 3646	4016 4046
6'-5 1/2" (1969) × 6'-6" (1981) × 25 9/16" (649)	1616 1650	2016 2050	2616 2650	3016 3050◊	3616 3650◊	4016 4050◊
6'-11 1/2" (2121) × 7'-0" (2134) × 28 9/16" (726)	1616 1656	2016 2056	2616 2656	3016 3056◊	3616 3656◊	4016 4056◊
7'-5 1/2" (2273) × 7'-6" (2286) × 31 9/16" (802)	1616 1660	2016 2060	2616 2660◊	3016 3060◊	3616 3660◊	4016 4060◊

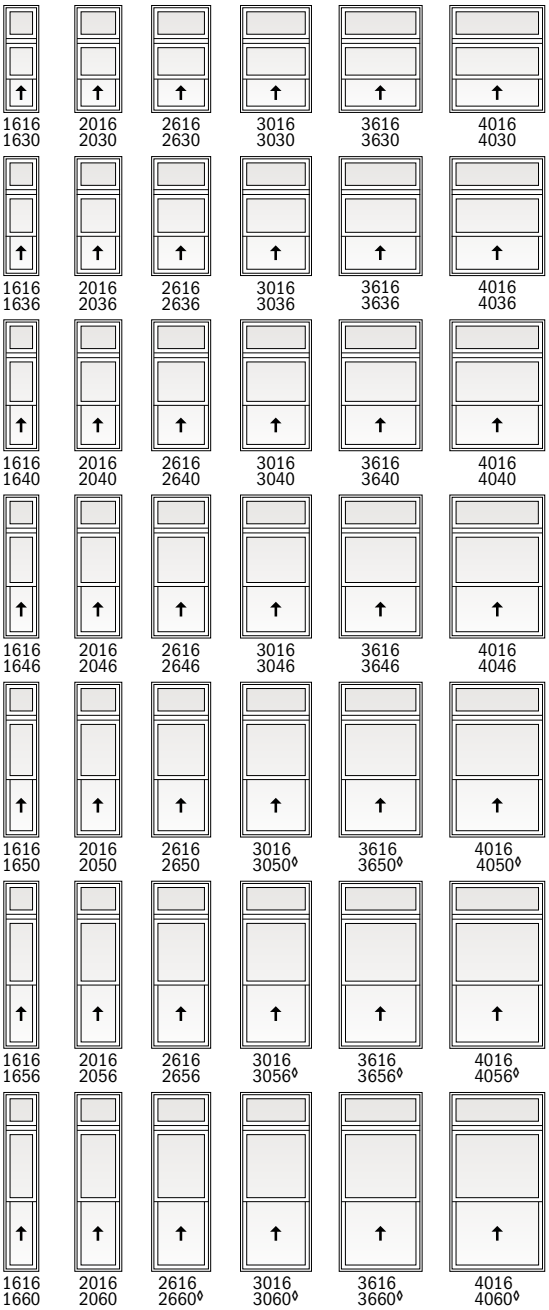

Windows have one continuous outer frame.

Unobstructed glass height dimension of upper transom sash is 11 1/4" (286).

Details shown on pages 50-51.

Grille patterns shown on page 47.

- "Window Dimension" always refers to outside frame-to-frame dimension.
- "**Minimum Rough Opening**" **dimensions may need to be increased to allow for use of building wraps, flashing, sill panning, brackets, fasteners or other items. See page 110 for more details.**
- Dimensions in parentheses are in millimeters.

◊Meets or exceed clear opening area of 5.7 sq.ft. or 0.53 m², clear opening width of 20" (508) and clear opening height of 24" (610).

Table of Sizes – 20-High Transom Window Over Single-Hung

Scale 1/8" (3) = 1'-0" (305) – 1:96

Window Dimension	1'-5 1/2" (445)	1'-11 1/2" (597)	2'-5 1/2" (749)	2'-11 1/2" (902)	3'-5 1/2" (1054)	3'-11 1/2" (1207)
Minimum Rough Opening	1'-6" (457)	2'-0" (610)	2'-6" (762)	3'-0" (914)	3'-6" (1067)	4'-0" (1219)
Unobstructed Glass (height of individual single-hung sash only)	11 1/4" (286)	17 1/4" (438)	23 1/4" (591)	29 1/4" (743)	35 1/4" (895)	41 1/4" (1048)

4'-11 1/2" (1511) 5'-0" (1524) 13 9/16" (345)	1620 1630	2020 2030	2620 2630	3020 3030	3620 3630	4020 4030
5'-5 1/2" (1664) 5'-6" (1676) 16 9/16" (421)	1620 1636	2020 2036	2620 2636	3020 3036	3620 3636	4020 4036
5'-11 1/2" (1816) 6'-0" (1829) 19 9/16" (497)	1620 1640	2020 2040	2620 2640	3020 3040	3620 3640	4020 4040
6'-5 1/2" (1969) 6'-6" (1981) 22 9/16" (573)	1620 1646	2020 2046	2620 2646	3020 3046	3620 3646	4020 4046
6'-11 1/2" (2121) 7'-0" (2134) 25 9/16" (649)	1620 1650	2020 2050	2620 2650	3020 3050◊	3620 3650◊	4020 4050◊
7'-5 1/2" (2273) 7'-6" (2286) 28 9/16" (726)	1620 1656	2020 2056	2620 2656	3020 3056◊	3620 3656◊	4020 4056◊
7'-11 1/2" (2426) 8'-0" (2438) 31 9/16" (802)	1620 1660	2020 2060	2620 2660◊	3020 3060◊	3620 3660◊	4020 4060◊

Windows have one continuous outer frame.

Unobstructed glass height dimension of upper transom sash is 17 1/4" (438).

Details shown on pages 50-51.

Grille patterns shown on page 47.

• "Window Dimension" always refers to outside frame-to-frame dimension.
• "**Minimum Rough Opening**" **dimensions may need to be increased to allow for use of building wraps, flashing, sill panning, brackets, fasteners or other items. See page 110 for more details.**
• Dimensions in parentheses are in millimeters.
◊Meets or exceed clear opening area of 5.7 sq.ft. or 0.53 m², clear opening width of 20" (508) and clear opening height of 24" (610).

Single-Hung Window Opening and Area Specifications *(continued from page 33)*

Window Number	Clear Opening Area Sq. Ft./(m²)		Clear Opening in Full Open Position Width Inches/(mm)		Height Inches/(mm)		Glass Area Sq. Ft./(m²)		Vent Area Sq. Ft./(m²)		Top of Subfloor to Top of Inside Sill Stop Inches/(mm)		Overall Window Area Sq. Ft./(m²)	
1676*	2.63	(0.24)	14"	(356)	27 1/16"	(687)	6.34	(0.59)	2.63	(0.24)	8"**	(203)**	10.88	(1.01)
2020	1.12	(0.10)	20"	(508)	8 1/16"	(204)	1.81	(0.17)	1.12	(0.10)	60 1/2"	(1537)	3.84	(0.36)
2026	1.53	(0.14)	20"	(508)	11 1/16"	(280)	2.53	(0.24)	1.53	(0.14)	54 1/2"	(1384)	4.81	(0.45)
2030	1.95	(0.18)	20"	(508)	14 1/16"	(357)	3.25	(0.30)	1.95	(0.18)	48 1/2"	(1232)	5.79	(0.54)
2036	2.37	(0.22)	20"	(508)	17 1/16"	(433)	3.96	(0.37)	2.37	(0.22)	42 1/2"	(1080)	6.77	(0.63)
2040	2.78	(0.26)	20"	(508)	20 1/16"	(509)	4.68	(0.44)	2.78	(0.26)	36 1/2"	(927)	7.75	(0.72)
2046	3.20	(0.30)	20"	(508)	23 1/16"	(585)	5.40	(0.50)	3.20	(0.30)	30 1/2"	(775)	8.73	(0.81)
2050	3.62	(0.34)	20"	(508)	26 1/16"	(661)	6.12	(0.57)	3.62	(0.34)	24 1/2"	(622)	9.71	(0.90)
2056	4.03	(0.38)	20"	(508)	29 1/16"	(738)	6.84	(0.64)	4.03	(0.38)	18 1/2"	(470)	10.69	(0.99)
2060	4.45	(0.41)	20"	(508)	32 1/16"	(814)	7.56	(0.70)	4.45	(0.41)	12 1/2"	(318)	11.67	(1.08)
2066	4.87	(0.45)	20"	(508)	35 1/16"	(890)	8.28	(0.77)	4.87	(0.45)	6 1/2"	(165)	12.65	(1.18)
2070*	3.48	(0.32)	20"	(508)	25 1/16"	(636)	9.00	(0.84)	3.48	(0.32)	14"**	(356)**	13.63	(1.27)
2076*	3.76	(0.35)	20"	(508)	27 1/16"	(687)	9.71	(0.90)	3.76	(0.35)	8"**	(203)**	14.61	(1.36)
2620	1.45	(0.14)	26"	(660)	8 1/16"	(204)	2.44	(0.23)	1.45	(0.14)	60 1/2"	(1537)	4.81	(0.45)
2626	1.99	(0.19)	26"	(660)	11 1/16"	(280)	3.41	(0.32)	1.99	(0.19)	54 1/2"	(1384)	6.04	(0.56)
2630	2.54	(0.24)	26"	(660)	14 1/16"	(357)	4.37	(0.41)	2.54	(0.24)	48 1/2"	(1232)	7.27	(0.68)
2636	3.08	(0.29)	26"	(660)	17 1/16"	(433)	5.34	(0.50)	3.08	(0.29)	42 1/2"	(1080)	8.50	(0.79)
2640	3.62	(0.34)	26"	(660)	20 1/16"	(509)	6.31	(0.59)	3.62	(0.34)	36 1/2"	(927)	9.73	(0.90)
2646	4.16	(0.39)	26"	(660)	23 1/16"	(585)	7.28	(0.68)	4.16	(0.39)	30 1/2"	(775)	10.96	(1.02)
2650	4.70	(0.44)	26"	(660)	26 1/16"	(661)	8.25	(0.77)	4.70	(0.44)	24 1/2"	(622)	12.19	(1.13)
2656	5.24	(0.49)	26"	(660)	29 1/16"	(738)	9.22	(0.86)	5.24	(0.49)	18 1/2"	(470)	13.42	(1.25)
2660 ◊	5.79	(0.54)	26"	(660)	32 1/16"	(814)	10.19	(0.95)	5.79	(0.54)	12 1/2"	(318)	14.65	(1.36)
2666 ◊	6.33	(0.59)	26"	(660)	35 1/16"	(890)	11.16	(1.04)	6.33	(0.45)	6 1/2"	(165)	15.88	(1.48)
2670*	4.52	(0.42)	26"	(660)	25 1/16"	(636)	12.12	(1.13)	4.52	(0.42)	14"**	(356)**	17.11	(1.59)
2676*	4.88	(0.45)	26"	(660)	27 1/16"	(687)	13.09	(1.22)	4.88	(0.45)	8"**	(203)**	18.34	(1.70)
3020	1.79	(0.17)	32"	(813)	8 1/16"	(204)	3.07	(0.29)	1.79	(0.17)	60 1/2"	(1537)	5.79	(0.54)
3026	2.45	(0.23)	32"	(813)	11 1/16"	(280)	4.28	(0.40)	2.45	(0.23)	54 1/2"	(1384)	7.27	(0.68)
3030	3.12	(0.29)	32"	(813)	14 1/16"	(357)	5.50	(0.51)	3.12	(0.29)	48 1/2"	(1232)	8.75	(0.81)
3036	3.79	(0.35)	32"	(813)	17 1/16"	(433)	6.72	(0.62)	3.79	(0.35)	42 1/2"	(1080)	10.23	(0.95)
3040	4.45	(0.41)	32"	(813)	20 1/16"	(509)	7.94	(0.74)	4.45	(0.41)	36 1/2"	(927)	11.71	(1.09)
3046	5.12	(0.48)	32"	(813)	23 1/16"	(585)	9.16	(0.85)	5.12	(0.48)	30 1/2"	(775)	13.19	(1.23)
3050 ◊	5.79	(0.54)	32"	(813)	26 1/16"	(661)	10.38	(0.96)	5.79	(0.54)	24 1/2"	(622)	14.67	(1.36)
3056 ◊	6.45	(0.60)	32"	(813)	29 1/16"	(738)	11.60	(1.08)	6.45	(0.60)	18 1/2"	(470)	16.15	(1.50)
3060 ◊	7.12	(0.66)	32"	(813)	32 1/16"	(814)	12.82	(1.19)	7.12	(0.66)	12 1/2"	(318)	17.63	(1.64)
3066 ◊	7.79	(0.72)	32"	(813)	35 1/16"	(890)	14.03	(1.30)	7.79	(0.72)	6 1/2"	(165)	19.11	(1.78)
3070*	5.56	(0.52)	32"	(813)	25 1/16"	(636)	15.25	(1.42)	5.56	(0.52)	14"**	(356)**	20.59	(1.91)
3076 ◊*	6.01	(0.56)	32"	(813)	27 1/16"	(687)	16.47	(1.53)	6.01	(0.56)	8"**	(203)**	22.06	(2.05)
3620	2.12	(0.20)	38"	(965)	8 1/16"	(204)	3.69	(0.34)	2.12	(0.20)	60 1/2"	(1537)	6.77	(0.63)
3626	2.91	(0.27)	38"	(965)	11 1/16"	(280)	5.16	(0.48)	2.91	(0.27)	54 1/2"	(1384)	8.50	(0.79)
3630	3.71	(0.34)	38"	(965)	14 1/16"	(357)	6.63	(0.62)	3.71	(0.34)	48 1/2"	(1232)	10.23	(0.95)
3636	4.50	(0.42)	38"	(965)	17 1/16"	(433)	8.10	(0.75)	4.50	(0.42)	42 1/2"	(1080)	11.96	(1.11)
3640	5.29	(0.49)	38"	(965)	20 1/16"	(509)	9.57	(0.89)	5.29	(0.49)	36 1/2"	(927)	13.69	(1.27)
3646	6.08	(0.57)	38"	(965)	23 1/16"	(585)	11.04	(1.03)	6.08	(0.57)	30 1/2"	(775)	15.42	(1.43)
3650 ◊	6.87	(0.64)	38"	(965)	26 1/16"	(661)	12.51	(1.16)	6.87	(0.64)	24 1/2"	(622)	17.15	(1.59)
3656 ◊	7.66	(0.71)	38"	(965)	29 1/16"	(738)	13.98	(1.30)	7.66	(0.71)	18 1/2"	(470)	18.88	(1.75)
3660 ◊	8.46	(0.79)	38"	(965)	32 1/16"	(814)	15.44	(1.44)	8.46	(0.79)	12 1/2"	(318)	20.61	(1.91)
3666 ◊	9.25	(0.86)	38"	(965)	35 1/16"	(890)	16.91	(1.57)	9.25	(0.86)	6 1/2"	(165)	22.34	(2.08)
3670 ◊*	6.61	(0.61)	38"	(965)	25 1/16"	(636)	18.38	(1.71)	6.61	(0.61)	14"**	(356)**	24.06	(2.24)
3676 ◊*	7.14	(0.66)	38"	(965)	27 1/16"	(687)	19.85	(1.84)	7.14	(0.66)	8"**	(203)**	25.79	(2.40)
4020	2.46	(0.23)	44"	(1118)	8 1/16"	(204)	4.32	(0.40)	2.46	(0.23)	60 1/2"	(1537)	7.75	(0.72)
4026	3.37	(0.31)	44"	(1118)	11 1/16"	(280)	6.04	(0.56)	3.37	(0.31)	54 1/2"	(1384)	9.73	(0.90)
4030	4.29	(0.40)	44"	(1118)	14 1/16"	(357)	7.76	(0.72)	4.29	(0.40)	48 1/2"	(1232)	11.71	(1.09)
4036	5.21	(0.48)	44"	(1118)	17 1/16"	(433)	9.48	(0.88)	5.21	(0.48)	42 1/2"	(1080)	13.69	(1.27)
4040	6.12	(0.57)	44"	(1118)	20 1/16"	(509)	11.20	(1.04)	6.12	(0.57)	36 1/2"	(927)	15.67	(1.46)
4046	7.04	(0.65)	44"	(1118)	23 1/16"	(585)	12.92	(1.20)	7.04	(0.65)	30 1/2"	(775)	17.65	(1.64)
4050 ◊	7.96	(0.74)	44"	(1118)	26 1/16"	(661)	14.64	(1.36)	7.96	(0.74)	24 1/2"	(622)	19.63	(1.82)
4056 ◊	8.87	(0.82)	44"	(1118)	29 1/16"	(738)	16.35	(1.52)	8.87	(0.82)	18 1/2"	(470)	21.61	(2.01)
4060 ◊	9.79	(0.91)	44"	(1118)	32 1/16"	(814)	18.07	(1.68)	9.79	(0.91)	12 1/2"	(318)	23.59	(2.19)
4066 ◊	10.71	(1.00)	44"	(1118)	35 1/16"	(890)	19.79	(1.84)	10.70	(1.00)	6 1/2"	(165)	25.56	(2.38)
4070 ◊*	7.65	(0.71)	44"	(1118)	25 1/16"	(636)	21.51	(2.00)	7.65	(0.71)	14"**	(356)**	27.54	(2.56)
4076 ◊*	8.26	(0.77)	44"	(1118)	27 1/16"	(687)	23.23	(2.16)	8.26	(0.77)	8"**	(203)**	29.52	(2.74)

For arch single-hung window specifications, see pages 31 and 33.

For reverse cottage, twin and triple single-hung window specifications, see pages 41, 43 and 45.

• "Top of Subfloor to Top of Inside Sill Stop" is calculated based upon a structural header height of 6'-10 1/2" (2096) except for XX70 and XX76 heights, which are calculated using a header height of 8' (2438).
• Dimensions in parentheses are in millimeters or square meters.
◊ Meets or exceed clear opening area of 5.7 sq. ft. or 0.53 m², clear opening width of 20" (508) and clear opening height of 24" (610).
*Available only with a 2:1 reverse cottage sash ratio.
**Calculated based upon a structural header height of 8' (2438).

Table of Sizes – Picture Window With Flanking 16-Wide Single-Hungs

Scale 1/8" (3) = 1'-0" (305) — 1:96

Window Dimension	5'-11 1/2" (1816)	6'-5 1/2" (1969)	6'-11 1/2" (2121)	7'-5 1/2" (2273)	7'-11 1/2" (2426)	8'-5 1/2" (2578)
Minimum Rough Opening	6'-0" (1829)	6'-6" (1981)	7'-0" (2134)	7'-6" (2286)	8'-0" (2438)	8'-6" (2591)
Unobstructed Glass (center sash only)	29 1/4" (743)	35 1/4" (895)	41 1/4" (1048)	47 1/4" (1200)	53 1/4" (1353)	59 1/4" (1505)
11 1/2" (292) / 1'-0" (305) / 5 1/4" (133)	16-3010-16	16-3610-16	16-4010-16	16-4610-16	16-5010-16	16-5610-16
1'-5 1/2" (445) / 1'-6" (457) / 11 1/4" (286)	16-3016-16	16-3616-16	16-4016-16	16-4616-16	16-5016-16	16-5616-16
1'-11 1/2" (597) / 2'-0" (610) / 17 1/4" (438)	16-3020-16	16-3620-16	16-4020-16	16-4620-16	16-5020-16	16-5620-16
3'-11 1/2" (1207) / 4'-0" (1219) / 41 1/4" (1048)	16-3040-16	16-3640-16	16-4040-16	16-4640-16	16-5040-16	16-5640-16
4'-5 1/2" (1359) / 4'-6" (1372) / 47 1/4" (1200)	16-3046-16	16-3646-16	16-4046-16	16-4646-16	16-5046-16	16-5646-16
4'-11 1/2" (1511) / 5'-0" (1524) / 53 1/4" (1353)	16-3050-16	16-3650-16	16-4050-16	16-4650-16	16-5050-16	16-5650-16
5'-5 1/2" (1664) / 5'-6" (1676) / 59 1/4" (1505)	16-3056-16	16-3656-16	16-4056-16	16-4656-16	16-5056-16	16-5656-16
5'-11 1/2" (1816) / 6'-0" (1829) / 65 1/4" (1657)	16-3060-16	16-3660-16	16-4060-16	16-4660-16	16-5060-16	16-5660-16

Windows have one continuous outer frame.

Unobstructed glass width dimension of flanking sash is 11 1/4" (286). For unobstructed glass height dimensions of flanking single-hungs, see page 32.

Matching transoms are also shown.

Details shown on pages 50-51.
Grille patterns shown on page 47.

- "Window Dimension" always refers to outside frame-to-frame dimension.
- "**Minimum Rough Opening**" **dimensions may need to be increased to allow for use of building wraps, flashing, sill panning, brackets, fasteners or other items. See page 110 for more details.**
- Dimensions in parentheses are in millimeters.

See notes on previous page.

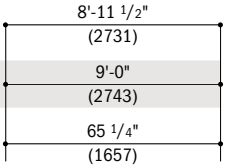

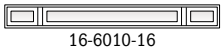
16-6010-16

16-6016-16

16-6020-16

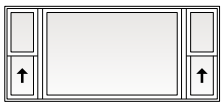
16-6040-16

16-6046-16

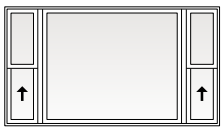
16-6050-16

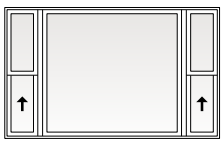
16-6056-16

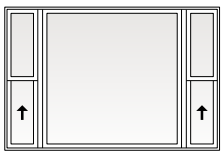
16-6060-16

Single-Hung Window Opening and Area Specifications – 3:2 Reverse Cottage Sash Ratio

Window Number	Clear Opening Area Sq. Ft./(m²)	Clear Opening in Full Open Position: Width Inches/(mm)	Clear Opening in Full Open Position: Height Inches/(mm)	Glass Area Sq. Ft./(m²)	Vent Area Sq. Ft./(m²)	Top of Subfloor to Top of Inside Sill Stop Inches/(mm)	Overall Window Area Sq. Ft./(m²)
1626	0.88 (0.08)	14" (356)	9 1/16" (230)	1.65 (0.15)	0.88 (0.08)	54 1/2" (1384)	3.59 (0.33)
1630	1.07 (0.10)	14" (356)	11 1/16" (280)	2.12 (0.20)	1.07 (0.10)	48 1/2" (1232)	4.31 (0.40)
1636	1.37 (0.13)	14" (356)	14 1/16" (357)	2.59 (0.24)	1.37 (0.13)	42 1/2" (1080)	5.04 (0.47)
1640	1.56 (0.15)	14" (356)	16 1/16" (407)	3.05 (0.28)	1.56 (0.15)	36 1/2" (927)	5.77 (0.54)
1646	1.85 (0.17)	14" (356)	19 1/16" (484)	3.52 (0.33)	1.85 (0.17)	30 1/2" (775)	6.50 (0.60)
1650	2.05 (0.19)	14" (356)	21 1/16" (534)	3.99 (0.37)	2.05 (0.19)	24 1/2" (622)	7.23 (0.67)
1656	2.24 (0.21)	14" (356)	23 1/16" (585)	4.46 (0.41)	2.24 (0.21)	18 1/2" (470)	7.96 (0.74)
1660	2.53 (0.24)	14" (356)	26 1/16" (661)	4.93 (0.46)	2.53 (0.24)	12 1/2" (318)	8.69 (0.81)
1666	2.73 (0.25)	14" (356)	28 1/16" (712)	5.40 (0.50)	2.73 (0.25)	6 1/2" (165)	9.42 (0.88)
2026	1.26 (0.12)	20" (508)	9 1/16" (230)	2.53 (0.24)	1.26 (0.12)	54 1/2" (1384)	4.81 (0.45)
2030	1.53 (0.14)	20" (508)	11 1/16" (280)	3.25 (0.30)	1.53 (0.14)	48 1/2" (1232)	5.79 (0.54)
2036	1.95 (0.18)	20" (508)	14 1/16" (357)	3.96 (0.37)	1.95 (0.18)	42 1/2" (1080)	6.77 (0.63)
2040	2.23 (0.21)	20" (508)	16 1/16" (407)	4.68 (0.44)	2.23 (0.21)	36 1/2" (927)	7.75 (0.72)
2046	2.64 (0.25)	20" (508)	19 1/16" (484)	5.40 (0.50)	2.64 (0.25)	30 1/2" (775)	8.73 (0.81)
2050	2.92 (0.27)	20" (508)	21 1/16" (534)	6.12 (0.57)	2.92 (0.27)	24 1/2" (622)	9.71 (0.90)
2056	3.20 (0.30)	20" (508)	23 1/16" (585)	6.84 (0.64)	3.20 (0.30)	18 1/2" (470)	10.69 (0.99)
2060	3.62 (0.34)	20" (508)	26 1/16" (661)	7.56 (0.70)	3.62 (0.34)	12 1/2" (318)	11.67 (1.08)
2066	3.89 (0.36)	20" (508)	28 1/16" (712)	8.28 (0.77)	3.89 (0.36)	6 1/2" (165)	12.65 (1.18)
2626	1.63 (0.15)	26" (660)	9 1/16" (230)	3.41 (0.32)	1.63 (0.15)	54 1/2" (1384)	6.04 (0.56)
2630	1.99 (0.19)	26" (660)	11 1/16" (280)	4.37 (0.41)	1.99 (0.19)	48 1/2" (1232)	7.27 (0.68)
2636	2.54 (0.24)	26" (660)	14 1/16" (357)	5.34 (0.50)	2.54 (0.24)	42 1/2" (1080)	8.50 (0.79)
2640	2.90 (0.27)	26" (660)	16 1/16" (407)	6.31 (0.59)	2.90 (0.27)	36 1/2" (927)	9.73 (0.90)
2646	3.44 (0.32)	26" (660)	19 1/16" (484)	7.28 (0.68)	3.44 (0.32)	30 1/2" (775)	10.96 (1.02)
2650	3.80 (0.35)	26" (660)	21 1/16" (534)	8.25 (0.77)	3.80 (0.35)	24 1/2" (622)	12.19 (1.13)
2656	4.16 (0.39)	26" (660)	23 1/16" (585)	9.22 (0.86)	4.16 (0.39)	18 1/2" (470)	13.42 (1.25)
2660	4.70 (0.44)	26" (660)	26 1/16" (661)	10.19 (0.95)	4.70 (0.44)	12 1/2" (318)	14.65 (1.36)
2666	5.06 (0.47)	26" (660)	28 1/16" (712)	11.16 (1.04)	5.06 (0.47)	6 1/2" (165)	15.88 (1.48)
3026	2.01 (0.19)	32" (813)	9 1/16" (230)	4.28 (0.40)	2.01 (0.19)	54 1/2" (1384)	7.27 (0.68)
3030	2.45 (0.23)	32" (813)	11 1/16" (280)	5.50 (0.51)	2.45 (0.23)	48 1/2" (1232)	8.75 (0.81)
3036	3.12 (0.29)	32" (813)	14 1/16" (357)	6.72 (0.62)	3.12 (0.29)	42 1/2" (1080)	10.23 (0.95)
3040	3.56 (0.33)	32" (813)	16 1/16" (407)	7.94 (0.74)	3.56 (0.33)	36 1/2" (927)	11.71 (1.09)
3046	4.23 (0.39)	32" (813)	19 1/16" (484)	9.16 (0.85)	4.23 (0.39)	30 1/2" (775)	13.19 (1.23)
3050	4.68 (0.43)	32" (813)	21 1/16" (534)	10.38 (0.96)	4.68 (0.43)	24 1/2" (622)	14.67 (1.36)
3056	5.12 (0.48)	32" (813)	23 1/16" (585)	11.60 (1.08)	5.12 (0.48)	18 1/2" (470)	16.15 (1.50)
3060 ◊	5.79 (0.54)	32" (813)	26 1/16" (661)	12.82 (1.19)	5.79 (0.54)	12 1/2" (318)	17.63 (1.64)
3066 ◊	6.23 (0.58)	32" (813)	28 1/16" (712)	14.03 (1.30)	6.23 (0.58)	6 1/2" (165)	19.11 (1.78)
3626	2.39 (0.22)	38" (965)	9 1/16" (230)	5.16 (0.48)	2.39 (0.22)	54 1/2" (1384)	8.50 (0.79)
3630	2.91 (0.27)	38" (965)	11 1/16" (280)	6.63 (0.62)	2.91 (0.27)	48 1/2" (1232)	10.23 (0.95)
3636	3.71 (0.34)	38" (965)	14 1/16" (357)	8.10 (0.75)	3.71 (0.34)	42 1/2" (1080)	11.96 (1.11)
3640	4.23 (0.39)	38" (965)	16 1/16" (407)	9.57 (0.89)	4.23 (0.39)	36 1/2" (927)	13.69 (1.27)
3646	5.02 (0.47)	38" (965)	19 1/16" (484)	11.04 (1.03)	5.02 (0.47)	30 1/2" (775)	15.42 (1.43)
3650	5.55 (0.52)	38" (965)	21 1/16" (534)	12.51 (1.16)	5.55 (0.52)	24 1/2" (622)	17.15 (1.59)
3656	6.08 (0.57)	38" (965)	23 1/16" (585)	13.98 (1.30)	6.08 (0.57)	18 1/2" (470)	18.88 (1.75)
3660 ◊	6.87 (0.64)	38" (965)	26 1/16" (661)	15.44 (1.44)	6.87 (0.64)	12 1/2" (318)	20.61 (1.91)
3666 ◊	7.40 (0.69)	38" (965)	28 1/16" (712)	16.91 (1.57)	7.40 (0.69)	6 1/2" (165)	22.34 (2.08)
4026	2.76 (0.26)	44" (1118)	9 1/16" (230)	6.04 (0.56)	2.76 (0.26)	54 1/2" (1384)	9.73 (0.90)
4030	3.37 (0.31)	44" (1118)	11 1/16" (280)	7.76 (0.72)	3.37 (0.31)	48 1/2" (1232)	11.71 (1.09)
4036	4.29 (0.40)	44" (1118)	14 1/16" (357)	9.48 (0.88)	4.29 (0.40)	42 1/2" (1080)	13.69 (1.27)
4040	4.90 (0.46)	44" (1118)	16 1/16" (407)	11.20 (1.04)	4.90 (0.46)	36 1/2" (927)	15.67 (1.46)
4046	5.82 (0.54)	44" (1118)	19 1/16" (484)	12.92 (1.20)	5.82 (0.54)	30 1/2" (775)	17.65 (1.64)
4050	6.43 (0.60)	44" (1118)	21 1/16" (534)	14.64 (1.36)	6.43 (0.60)	24 1/2" (622)	19.63 (1.82)
4056	7.04 (0.65)	44" (1118)	23 1/16" (585)	16.35 (1.52)	7.04 (0.65)	18 1/2" (470)	21.61 (2.01)
4060 ◊	7.96 (0.74)	44" (1118)	26 1/16" (661)	18.07 (1.68)	7.96 (0.74)	12 1/2" (318)	23.59 (2.19)
4066 ◊	8.57 (0.80)	44" (1118)	28 1/16" (712)	19.79 (1.84)	8.57 (0.80)	6 1/2" (165)	25.56 (2.38)

• "Top of Subfloor to Top of Inside Sill Stop" is calculated based upon a structural header height of 6'-10 1/2" (2096).
• Dimensions in parentheses are in millimeters or square meters.
◊ Meets or exceed clear opening area of 5.7 sq.ft. or 0.53 m², clear opening width of 20" (508) and clear opening height of 24" (610).

Table of Sizes – Picture Window With Flanking 20-Wide Single-Hungs

Scale 1/8" (3) = 1'-0" (305) — 1:96

Window Dimension	6'-11 1/2" (2121)	7'-5 1/2" (2273)	7'-11 1/2" (2426)	8'-5 1/2" (2578)	8'-11 1/2" (2731)
Minimum Rough Opening	7'-0" (2134)	7'-6" (2286)	8'-0" (2438)	8'-6" (2591)	9'-0" (2743)
Unobstructed Glass (center sash only)	29 1/4" (743)	35 1/4" (895)	41 1/4" (1048)	47 1/4" (1200)	53 1/4" (1353)

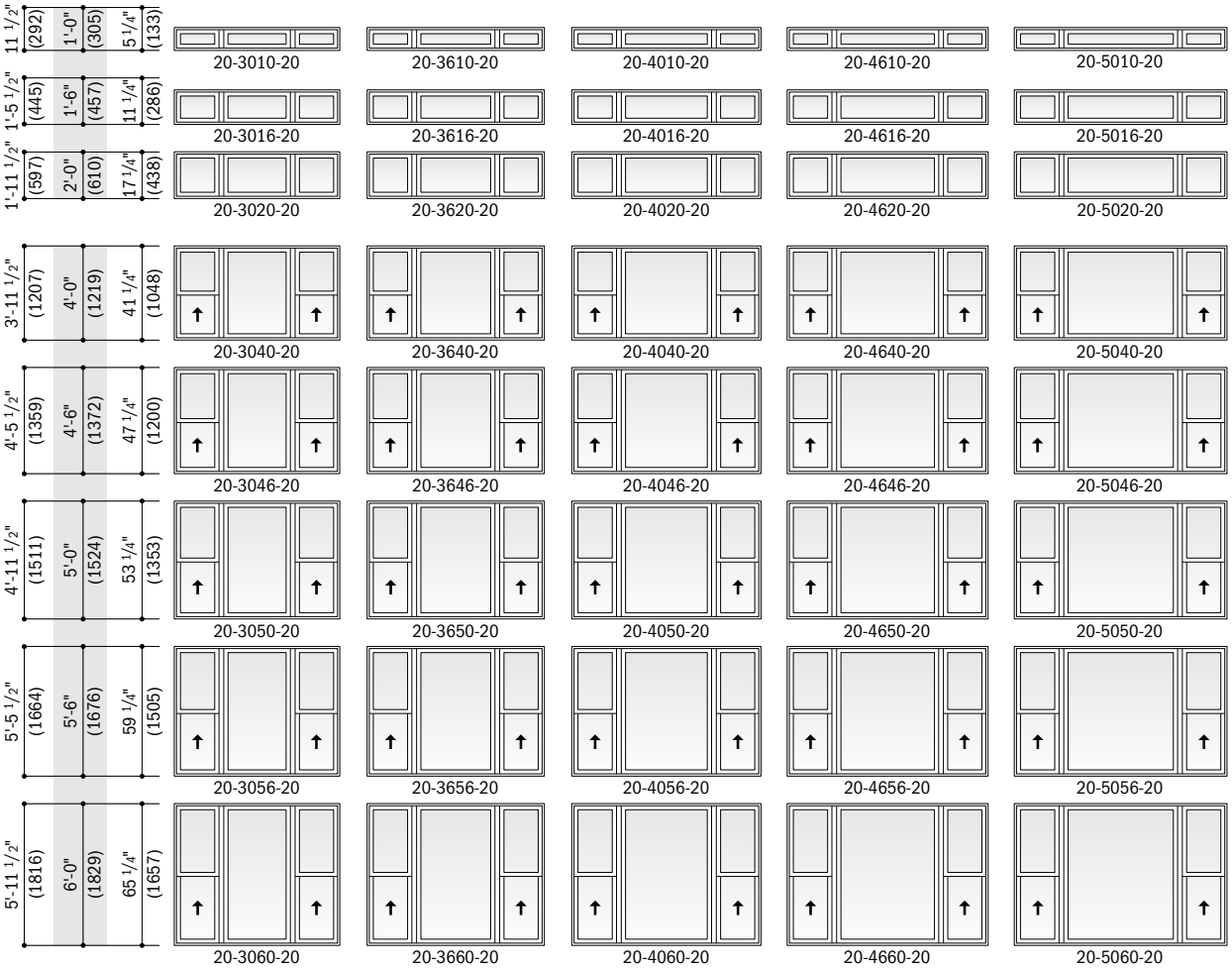

Windows have one continuous outer frame.

Unobstructed glass width dimension of flanking sash is 17 1/4" (438). For unobstructed glass height dimensions of flanking single-hungs, see page 32.

Matching transoms are also shown.

Details shown on pages 50-51.
Grille patterns shown on page 47.

- "Window Dimension" always refers to outside frame-to-frame dimension.
- "**Minimum Rough Opening**" **dimensions may need to be increased to allow for use of building wraps, flashing, sill panning, brackets, fasteners or other items. See page 110 for more details.**
- Dimensions in parentheses are in millimeters.

Notes on previous page also apply to this page.

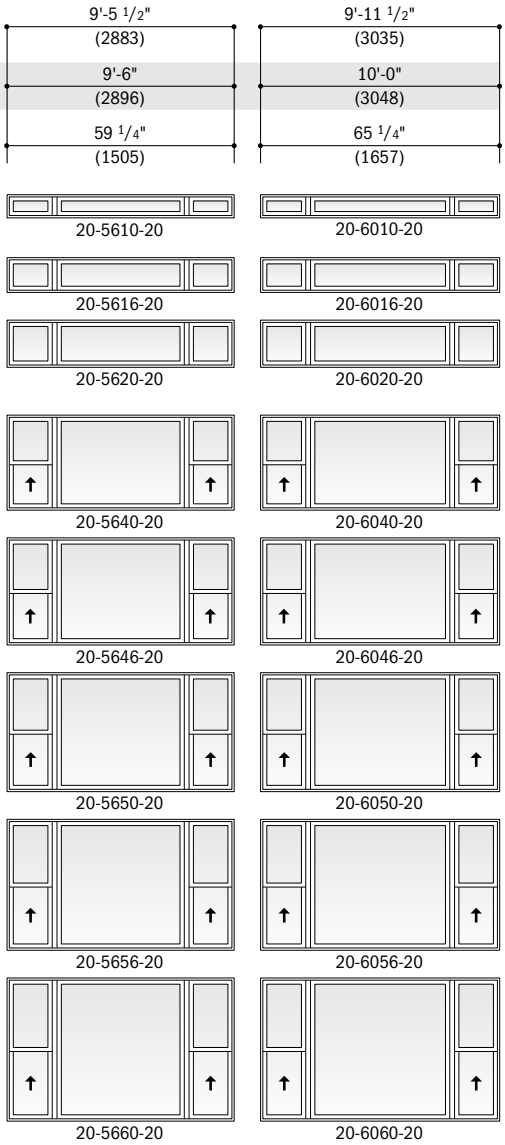

Twin Single-Hung Window Opening and Area Specifications

Window Number	Clear Opening Area Sq. Ft./(m²)		Clear Opening in Full Open Position: Width Inches/(mm)		Clear Opening in Full Open Position: Height Inches/(mm)		Glass Area Sq. Ft./(m²)		Vent Area Sq. Ft./(m²)		Top of Subfloor to Top of Inside Sill Stop Inches/(mm)		Overall Window Area Sq. Ft./(m²)	
1620-2	0.78	(0.07)	14"	(356)	8 1/16"	(204)	2.36	(0.22)	1.56	(0.15)	60 1/2"	(1537)	5.79	(0.54)
1626-2	1.07	(0.10)	14"	(356)	11 1/16"	(280)	3.30	(0.31)	2.15	(0.20)	54 1/2"	(1384)	7.27	(0.68)
1630-2	1.37	(0.13)	14"	(356)	14 1/16"	(357)	4.23	(0.39)	2.73	(0.25)	48 1/2"	(1232)	8.75	(0.81)
1636-2	1.66	(0.15)	14"	(356)	17 1/16"	(433)	5.17	(0.48)	3.31	(0.31)	42 1/2"	(1080)	10.23	(0.95)
1640-2	1.95	(0.18)	14"	(356)	20 1/16"	(509)	6.11	(0.57)	3.90	(0.36)	36 1/2"	(927)	11.71	(1.09)
1646-2	2.24	(0.21)	14"	(356)	23 1/16"	(585)	7.05	(0.66)	4.48	(0.42)	30 1/2"	(775)	13.19	(1.23)
1650-2	2.53	(0.24)	14"	(356)	26 1/16"	(661)	7.98	(0.74)	5.06	(0.47)	24 1/2"	(622)	14.67	(1.36)
1656-2	2.82	(0.26)	14"	(356)	29 1/16"	(738)	8.92	(0.83)	5.65	(0.53)	18 1/2"	(470)	16.15	(1.50)
1660-2	3.12	(0.29)	14"	(356)	32 1/16"	(814)	9.86	(0.92)	6.23	(0.58)	12 1/2"	(318)	17.63	(1.64)
2020-2	1.12	(0.10)	20"	(508)	8 1/16"	(204)	3.62	(0.34)	2.23	(0.21)	60 1/2"	(1537)	7.75	(0.72)
2026-2	1.53	(0.14)	20"	(508)	11 1/16"	(280)	5.05	(0.47)	3.07	(0.29)	54 1/2"	(1384)	9.73	(0.90)
2030-2	1.95	(0.18)	20"	(508)	14 1/16"	(357)	6.49	(0.60)	3.90	(0.36)	48 1/2"	(1232)	11.71	(1.09)
2036-2	2.37	(0.22)	20"	(508)	17 1/16"	(433)	7.93	(0.74)	4.73	(0.44)	42 1/2"	(1080)	13.69	(1.27)
2040-2	2.78	(0.26)	20"	(508)	20 1/16"	(509)	9.37	(0.87)	5.57	(0.52)	36 1/2"	(927)	15.67	(1.46)
2046-2	3.20	(0.30)	20"	(508)	23 1/16"	(585)	10.80	(1.00)	6.40	(0.60)	30 1/2"	(775)	17.65	(1.64)
2050-2	3.62	(0.34)	20"	(508)	26 1/16"	(661)	12.24	(1.14)	7.23	(0.67)	24 1/2"	(622)	19.63	(1.82)
2056-2	4.03	(0.38)	20"	(508)	29 1/16"	(738)	13.68	(1.27)	8.07	(0.75)	18 1/2"	(470)	21.61	(2.01)
2060-2	4.45	(0.41)	20"	(508)	32 1/16"	(814)	15.12	(1.40)	8.90	(0.83)	12 1/2"	(318)	23.59	(2.19)
2620-2	1.45	(0.14)	26"	(660)	8 1/16"	(204)	4.87	(0.45)	2.90	(0.27)	60 1/2"	(1537)	9.71	(0.90)
2626-2	1.99	(0.19)	26"	(660)	11 1/16"	(280)	6.81	(0.63)	3.99	(0.37)	54 1/2"	(1384)	12.19	(1.13)
2630-2	2.54	(0.24)	26"	(660)	14 1/16"	(357)	8.75	(0.81)	5.07	(0.47)	48 1/2"	(1232)	14.67	(1.36)
2636-2	3.08	(0.29)	26"	(660)	17 1/16"	(433)	10.69	(0.99)	6.15	(0.57)	42 1/2"	(1080)	17.15	(1.59)
2640-2	3.62	(0.34)	26"	(660)	20 1/16"	(509)	12.62	(1.17)	7.24	(0.67)	36 1/2"	(927)	19.63	(1.82)
2646-2	4.16	(0.39)	26"	(660)	23 1/16"	(585)	14.56	(1.35)	8.32	(0.77)	30 1/2"	(775)	22.11	(2.05)
2650-2	4.70	(0.44)	26"	(660)	26 1/16"	(661)	16.50	(1.53)	9.40	(0.87)	24 1/2"	(622)	24.59	(2.28)
2656-2	5.24	(0.49)	26"	(660)	29 1/16"	(738)	18.44	(1.71)	10.49	(0.97)	18 1/2"	(470)	27.06	(2.51)
2660-2 ◊	5.79	(0.54)	26"	(660)	32 1/16"	(814)	20.37	(1.89)	11.57	(1.08)	12 1/2"	(318)	29.54	(2.75)
3020-2	1.79	(0.17)	32"	(813)	8 1/16"	(204)	6.13	(0.57)	3.57	(0.33)	60 1/2"	(1537)	11.67	(1.08)
3026-2	2.45	(0.23)	32"	(813)	11 1/16"	(280)	8.57	(0.80)	4.91	(0.46)	54 1/2"	(1384)	14.65	(1.36)
3030-2	3.12	(0.29)	32"	(813)	14 1/16"	(357)	11.01	(1.02)	6.24	(0.58)	48 1/2"	(1232)	17.63	(1.64)
3036-2	3.79	(0.35)	32"	(813)	17 1/16"	(433)	13.44	(1.25)	7.57	(0.70)	42 1/2"	(1080)	20.61	(1.91)
3040-2	4.45	(0.41)	32"	(813)	20 1/16"	(509)	15.88	(1.48)	8.91	(0.83)	36 1/2"	(927)	23.59	(2.19)
3046-2	5.12	(0.48)	32"	(813)	23 1/16"	(585)	18.32	(1.70)	10.24	(0.95)	30 1/2"	(775)	26.56	(2.47)
3050-2 ◊	5.79	(0.54)	32"	(813)	26 1/16"	(661)	20.76	(1.93)	11.57	(1.08)	24 1/2"	(622)	29.54	(2.75)
3056-2 ◊	6.45	(0.60)	32"	(813)	29 1/16"	(738)	23.19	(2.16)	12.91	(1.20)	18 1/2"	(470)	32.52	(3.02)
3060-2 ◊	7.12	(0.66)	32"	(813)	32 1/16"	(814)	25.63	(2.38)	14.24	(1.32)	12 1/2"	(318)	35.50	(3.30)
3620-2	2.12	(0.20)	38"	(965)	8 1/16"	(204)	7.39	(0.69)	4.24	(0.39)	60 1/2"	(1537)	13.63	(1.27)
3626-2	2.91	(0.27)	38"	(965)	11 1/16"	(280)	10.33	(0.96)	5.83	(0.54)	54 1/2"	(1384)	17.11	(1.59)
3630-2	3.71	(0.34)	38"	(965)	14 1/16"	(357)	13.26	(1.23)	7.41	(0.69)	48 1/2"	(1232)	20.59	(1.91)
3636-2	4.50	(0.42)	38"	(965)	17 1/16"	(433)	16.20	(1.51)	8.99	(0.84)	42 1/2"	(1080)	24.06	(2.24)
3640-2	5.29	(0.49)	38"	(965)	20 1/16"	(509)	19.14	(1.78)	10.58	(0.98)	36 1/2"	(927)	27.54	(2.56)
3646-2	6.08	(0.57)	38"	(965)	23 1/16"	(585)	22.08	(2.05)	12.16	(1.13)	30 1/2"	(775)	31.02	(2.88)
3650-2 ◊	6.87	(0.64)	38"	(965)	26 1/16"	(661)	25.01	(2.32)	13.74	(1.28)	24 1/2"	(622)	34.50	(3.21)
3656-2 ◊	7.66	(0.71)	38"	(965)	29 1/16"	(738)	27.95	(2.60)	15.33	(1.42)	18 1/2"	(470)	37.98	(3.53)
3660-2 ◊	8.46	(0.79)	38"	(965)	32 1/16"	(814)	30.89	(2.87)	16.91	(1.57)	12 1/2"	(318)	41.46	(3.85)
4020-2	2.46	(0.23)	44"	(1118)	8 1/16"	(204)	8.65	(0.80)	4.91	(0.46)	60 1/2"	(1537)	15.59	(1.45)
4026-2	3.37	(0.31)	44"	(1118)	11 1/16"	(280)	12.08	(1.12)	6.75	(0.63)	54 1/2"	(1384)	19.56	(1.82)
4030-2	4.29	(0.40)	44"	(1118)	14 1/16"	(357)	15.52	(1.44)	8.58	(0.80)	48 1/2"	(1232)	23.54	(2.19)
4036-2	5.21	(0.48)	44"	(1118)	17 1/16"	(433)	18.96	(1.76)	10.41	(0.97)	42 1/2"	(1080)	27.52	(2.56)
4040-2	6.12	(0.57)	44"	(1118)	20 1/16"	(509)	22.40	(2.08)	12.25	(1.14)	36 1/2"	(927)	31.50	(2.93)
4046-2	7.04	(0.65)	44"	(1118)	23 1/16"	(585)	25.83	(2.40)	14.08	(1.31)	30 1/2"	(775)	35.48	(3.30)
4050-2 ◊	7.96	(0.74)	44"	(1118)	26 1/16"	(661)	29.27	(2.72)	15.91	(1.48)	24 1/2"	(622)	39.46	(3.67)
4056-2 ◊	8.87	(0.82)	44"	(1118)	29 1/16"	(738)	32.71	(3.04)	17.75	(1.65)	18 1/2"	(470)	43.44	(4.04)
4060-2 ◊	9.79	(0.91)	44"	(1118)	32 1/16"	(814)	36.15	(3.36)	19.58	(1.82)	12 1/2"	(318)	47.42	(4.41)

• "Top of Subfloor to Top of Inside Sill Stop" is calculated based upon a structural header height of 6'-10 1/2" (2096).
• Dimensions in parentheses are in millimeters or square meters.
◊ Meets or exceed clear opening area of 5.7 sq. ft. or 0.53 m², clear opening width of 20" (508) and clear opening height of 24" (610).

Table of Sizes – Picture Window With Flanking 26-Wide Single-Hungs

Scale 1/8" (3) = 1'-0" (305) — 1:96

Window Dimension	7'-11 1/2" (2426)	8'-5 1/2" (2578)	8'-11 1/2" (2731)	9'-5 1/2" (2883)	9'-11 1/2" (3035)
Minimum Rough Opening	8'-0" (2438)	8'-6" (2591)	9'-0" (2743)	9'-6" (2896)	10'-0" (3048)
Unobstructed Glass (center sash only)	29 1/4" (743)	35 1/4" (895)	41 1/4" (1048)	47 1/4" (1200)	53 1/4" (1353)

11 1/2" (292) 1'-0" (305) 5 1/4" (133)	26-3010-26	26-3610-26	26-4010-26	26-4610-26	26-5010-26
1'-5 1/2" (445) 1'-6" (457) 11 1/4" (286)	26-3016-26	26-3616-26	26-4016-26	26-4616-26	26-5016-26
1'-11 1/2" (597) 2'-0" (610) 17 1/4" (438)	26-3020-26	26-3620-26	26-4020-26	26-4620-26	26-5020-26
3'-11 1/2" (1207) 4'-0" (1219) 41 1/4" (1048)	26-3040-26	26-3640-26	26-4040-26	26-4640-26	26-5040-26
4'-5 1/2" (1359) 4'-6" (1372) 47 1/4" (1200)	26-3046-26	26-3646-26	26-4046-26	26-4646-26	26-5046-26
4'-11 1/2" (1511) 5'-0" (1524) 53 1/4" (1353)	26-3050-26	26-3650-26	26-4050-26	26-4650-26	26-5050-26
5'-5 1/2" (1664) 5'-6" (1676) 59 1/4" (1505)	26-3056-26	26-3656-26	26-4056-26	26-4656-26	26-5056-26
5'-11 1/2" (1816) 6'-0" (1829) 65 1/4" (1657)	26-3060-26◊	26-3660-26◊	26-4060-26◊	26-4660-26◊	26-5060-26◊

Windows have one continuous outer frame.

Unobstructed glass width dimension of flanking sash is 23 1/4" (591). For unobstructed glass height dimensions of flanking single-hungs, see page 32.

Matching transoms are also shown.

Details shown on pages 50-51.
Grille patterns shown on page 47.

• "Window Dimension" always refers to outside frame-to-frame dimension.
• "**Minimum Rough Opening**" **dimensions may need to be increased to allow for use of building wraps, flashing, sill panning, brackets, fasteners or other items. See page 110 for more details.**
• Dimensions in parentheses are in millimeters.
◊ Meets or exceed clear opening area of 5.7 sq.ft. or 0.53 m², clear opening width of 20" (508) and clear opening height of 24" (610).

Notes on previous page also apply to this page.

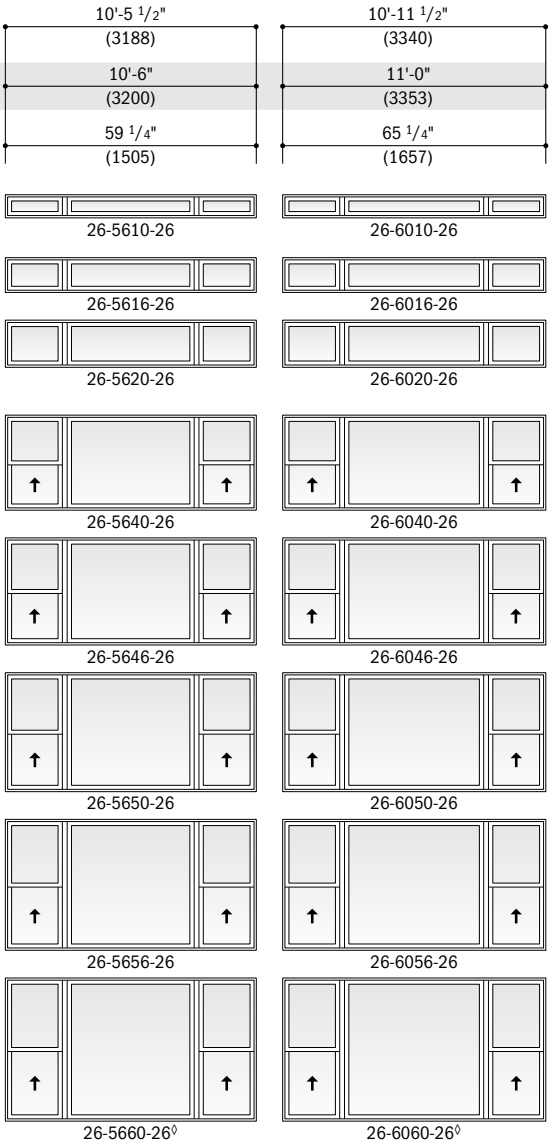

Triple Single-Hung Window Opening and Area Specifications

Window Number	Clear Opening Area Sq. Ft./(m²)	Clear Opening in Full Open Position: Width Inches/(mm)	Clear Opening in Full Open Position: Height Inches/(mm)	Glass Area Sq. Ft./(m²)	Vent Area Sq. Ft./(m²)	Top of Subfloor to Top of Inside Sill Stop Inches/(mm)	Overall Window Area Sq. Ft./(m²)
1620-3	0.78 (0.07)	14" (356)	8 1/16" (204)	3.54 (0.33)	2.35 (0.22)	60 1/2" (1537)	8.73 (0.81)
1626-3	1.07 (0.10)	14" (356)	11 1/16" (280)	4.94 (0.46)	3.22 (0.30)	54 1/2" (1384)	10.96 (1.02)
1630-3	1.37 (0.13)	14" (356)	14 1/16" (357)	6.35 (0.59)	4.10 (0.38)	48 1/2" (1232)	13.19 (1.23)
1636-3	1.66 (0.15)	14" (356)	17 1/16" (433)	7.76 (0.72)	4.97 (0.46)	42 1/2" (1080)	15.42 (1.43)
1640-3	1.95 (0.18)	14" (356)	20 1/16" (509)	9.16 (0.85)	5.85 (0.54)	36 1/2" (927)	17.65 (1.64)
1646-3	2.24 (0.21)	14" (356)	23 1/16" (585)	10.57 (0.98)	6.72 (0.62)	30 1/2" (775)	19.88 (1.85)
1650-3	2.53 (0.24)	14" (356)	26 1/16" (661)	11.97 (1.11)	7.60 (0.71)	24 1/2" (622)	22.11 (2.05)
1656-3	2.82 (0.26)	14" (356)	29 1/16" (738)	13.38 (1.24)	8.47 (0.79)	18 1/2" (470)	24.34 (2.26)
1660-3	3.12 (0.29)	14" (356)	32 1/16" (814)	14.79 (1.37)	9.35 (0.87)	12 1/2" (318)	26.56 (2.47)
2020-3	1.12 (0.10)	20" (508)	8 1/16" (204)	5.42 (0.50)	3.35 (0.31)	60 1/2" (1537)	11.67 (1.08)
2026-3	1.53 (0.14)	20" (508)	11 1/16" (280)	7.58 (0.70)	4.60 (0.43)	54 1/2" (1384)	14.65 (1.36)
2030-3	1.95 (0.18)	20" (508)	14 1/16" (357)	9.74 (0.90)	5.85 (0.54)	48 1/2" (1232)	17.63 (1.64)
2036-3	2.37 (0.22)	20" (508)	17 1/16" (433)	11.89 (1.11)	7.10 (0.66)	42 1/2" (1080)	20.61 (1.91)
2040-3	2.78 (0.26)	20" (508)	20 1/16" (509)	14.05 (1.31)	8.35 (0.78)	36 1/2" (927)	23.59 (2.19)
2046-3	3.20 (0.30)	20" (508)	23 1/16" (585)	16.20 (1.51)	9.60 (0.89)	30 1/2" (775)	26.56 (2.47)
2050-3	3.62 (0.34)	20" (508)	26 1/16" (661)	18.36 (1.71)	10.85 (1.01)	24 1/2" (622)	29.54 (2.75)
2056-3	4.03 (0.38)	20" (508)	29 1/16" (738)	20.52 (1.91)	12.10 (1.12)	18 1/2" (470)	32.52 (3.02)
2060-3	4.45 (0.41)	20" (508)	32 1/16" (814)	22.67 (2.11)	13.35 (1.24)	12 1/2" (318)	35.50 (3.30)
2620-3	1.45 (0.14)	26" (660)	8 1/16" (204)	7.31 (0.68)	4.35 (0.41)	60 1/2" (1537)	14.61 (1.36)
2626-3	1.99 (0.19)	26" (660)	11 1/16" (280)	10.22 (0.95)	5.98 (0.56)	54 1/2" (1384)	18.34 (1.70)
2630-3	2.54 (0.24)	26" (660)	14 1/16" (357)	13.12 (1.22)	7.60 (0.71)	48 1/2" (1232)	22.06 (2.05)
2636-3	3.08 (0.29)	26" (660)	17 1/16" (433)	16.03 (1.49)	9.23 (0.86)	42 1/2" (1080)	25.79 (2.40)
2640-3	3.62 (0.34)	26" (660)	20 1/16" (509)	18.93 (1.76)	10.85 (1.01)	36 1/2" (927)	29.52 (2.74)
2646-3	4.16 (0.39)	26" (660)	23 1/16" (585)	21.84 (2.03)	12.48 (1.16)	30 1/2" (775)	33.25 (3.09)
2650-3	4.70 (0.44)	26" (660)	26 1/16" (661)	24.75 (2.30)	14.10 (1.31)	24 1/2" (622)	36.98 (3.44)
2656-3	5.24 (0.49)	26" (660)	29 1/16" (738)	27.65 (2.57)	15.73 (1.46)	18 1/2" (470)	40.71 (3.78)
2660-3 ◊	5.79 (0.54)	26" (660)	32 1/16" (814)	30.56 (2.84)	17.35 (1.61)	12 1/2" (318)	44.44 (4.13)
3020-3	1.79 (0.17)	32" (813)	8 1/16" (204)	9.20 (0.85)	5.36 (0.50)	60 1/2" (1537)	17.54 (1.63)
3026-3	2.45 (0.23)	32" (813)	11 1/16" (280)	12.85 (1.19)	7.36 (0.68)	54 1/2" (1384)	22.02 (2.05)
3030-3	3.12 (0.29)	32" (813)	14 1/16" (357)	16.51 (1.53)	9.36 (0.87)	48 1/2" (1232)	26.50 (2.46)
3036-3	3.79 (0.35)	32" (813)	17 1/16" (433)	20.16 (1.87)	11.36 (1.06)	42 1/2" (1080)	30.98 (2.88)
3040-3	4.45 (0.41)	32" (813)	20 1/16" (509)	23.82 (2.21)	13.36 (1.24)	36 1/2" (927)	35.46 (3.29)
3046-3	5.12 (0.48)	32" (813)	23 1/16" (585)	27.48 (2.55)	15.36 (1.43)	30 1/2" (775)	39.94 (3.71)
3050-3 ◊	5.79 (0.54)	32" (813)	26 1/16" (661)	31.13 (2.89)	17.36 (1.61)	24 1/2" (622)	44.42 (4.13)
3056-3 ◊	6.45 (0.60)	32" (813)	29 1/16" (738)	34.79 (3.23)	19.36 (1.80)	18 1/2" (470)	48.90 (4.54)
3060-3 ◊	7.12 (0.66)	32" (813)	32 1/2" (814)	38.45 (3.57)	21.36 (1.98)	12 1/2" (318)	53.38 (4.96)
3620-3	2.12 (0.20)	38" (965)	8 1/16" (204)	11.08 (1.03)	6.36 (0.59)	60 1/2" (1537)	20.48 (1.90)
3626-3	2.91 (0.27)	38" (965)	11 1/16" (280)	15.49 (1.44)	8.74 (0.81)	54 1/2" (1384)	25.71 (2.39)
3630-3	3.71 (0.34)	38" (965)	14 1/16" (357)	19.89 (1.85)	11.11 (1.03)	48 1/2" (1232)	30.94 (2.87)
3636-3	4.50 (0.42)	38" (965)	17 1/16" (433)	24.30 (2.26)	13.49 (1.25)	42 1/2" (1080)	36.17 (3.36)
3640-3	5.29 (0.49)	38" (965)	20 1/16" (509)	28.71 (2.67)	15.86 (1.47)	36 1/2" (927)	41.40 (3.85)
3646-3	6.08 (0.57)	38" (965)	23 1/16" (585)	33.11 (3.08)	18.24 (1.69)	30 1/2" (775)	46.63 (4.33)
3650-3 ◊	6.87 (0.64)	38" (965)	26 1/16" (661)	37.52 (3.49)	20.61 (1.92)	24 1/2" (622)	51.86 (4.82)
3656-3 ◊	7.66 (0.71)	38" (965)	29 1/16" (738)	41.93 (3.90)	22.99 (2.14)	18 1/2" (470)	57.09 (5.30)
3660-3 ◊	8.46 (0.79)	38" (965)	32 1/16" (814)	46.33 (4.30)	25.36 (2.36)	12 1/2" (318)	62.31 (5.79)
4020-3	2.46 (0.23)	44" (1118)	8 1/16" (204)	12.97 (1.21)	7.37 (0.69)	60 1/2" (1537)	23.42 (2.18)
4026-3	3.37 (0.31)	44" (1118)	11 1/16" (280)	18.12 (1.68)	10.12 (0.94)	54 1/2" (1384)	29.40 (2.73)
4030-3	4.29 (0.40)	44" (1118)	14 1/16" (357)	23.28 (2.16)	12.87 (1.20)	48 1/2" (1232)	35.38 (3.29)
4036-3	5.21 (0.48)	44" (1118)	17 1/16" (433)	28.44 (2.64)	15.62 (1.45)	42 1/2" (1080)	41.36 (3.84)
4040-3	6.12 (0.57)	44" (1118)	20 1/16" (509)	33.59 (3.12)	18.37 (1.71)	36 1/2" (927)	47.34 (4.40)
4046-3	7.04 (0.65)	44" (1118)	23 1/16" (585)	38.75 (3.60)	21.12 (1.96)	30 1/2" (775)	53.31 (4.95)
4050-3 ◊	7.96 (0.74)	44" (1118)	26 1/16" (661)	43.91 (4.08)	23.87 (2.22)	24 1/2" (622)	59.29 (5.51)
4056-3 ◊	8.87 (0.82)	44" (1118)	29 1/16" (738)	49.06 (4.56)	26.62 (2.47)	18 1/2" (470)	65.27 (6.06)
4060-3 ◊	9.79 (0.91)	44" (1118)	32 1/16" (814)	54.22 (5.04)	29.37 (2.73)	12 1/2" (318)	71.25 (6.62)

• "Top of Subfloor to Top of Inside Sill Stop" is calculated based upon a structural header height of 6'-10 1/2" (2096).
• Dimensions in parentheses are in millimeters or square meters.
◊ Meets or exceed clear opening area of 5.7 sq. ft. or 0.53 m², clear opening width of 20" (508) and clear opening height of 24" (610).

Table of Sizes – Picture Window With Flanking 30-Wide Single-Hungs

Notes on next page also apply to this page.

Scale 1/8" (3) = 1'-0" (305) – 1:96

Window Dimension	8'-11 1/2" (2731)	9'-5 1/2" (2883)	9'-11 1/2" (3035)	10'-5 1/2" (3188)
Minimum Rough Opening	9'-0" (2743)	9'-6" (2896)	10'-0" (3048)	10'-6" (3200)
Unobstructed Glass (center sash only)	29 1/4" (743)	35 1/4" (895)	41 1/4" (1048)	47 1/4" (1200)

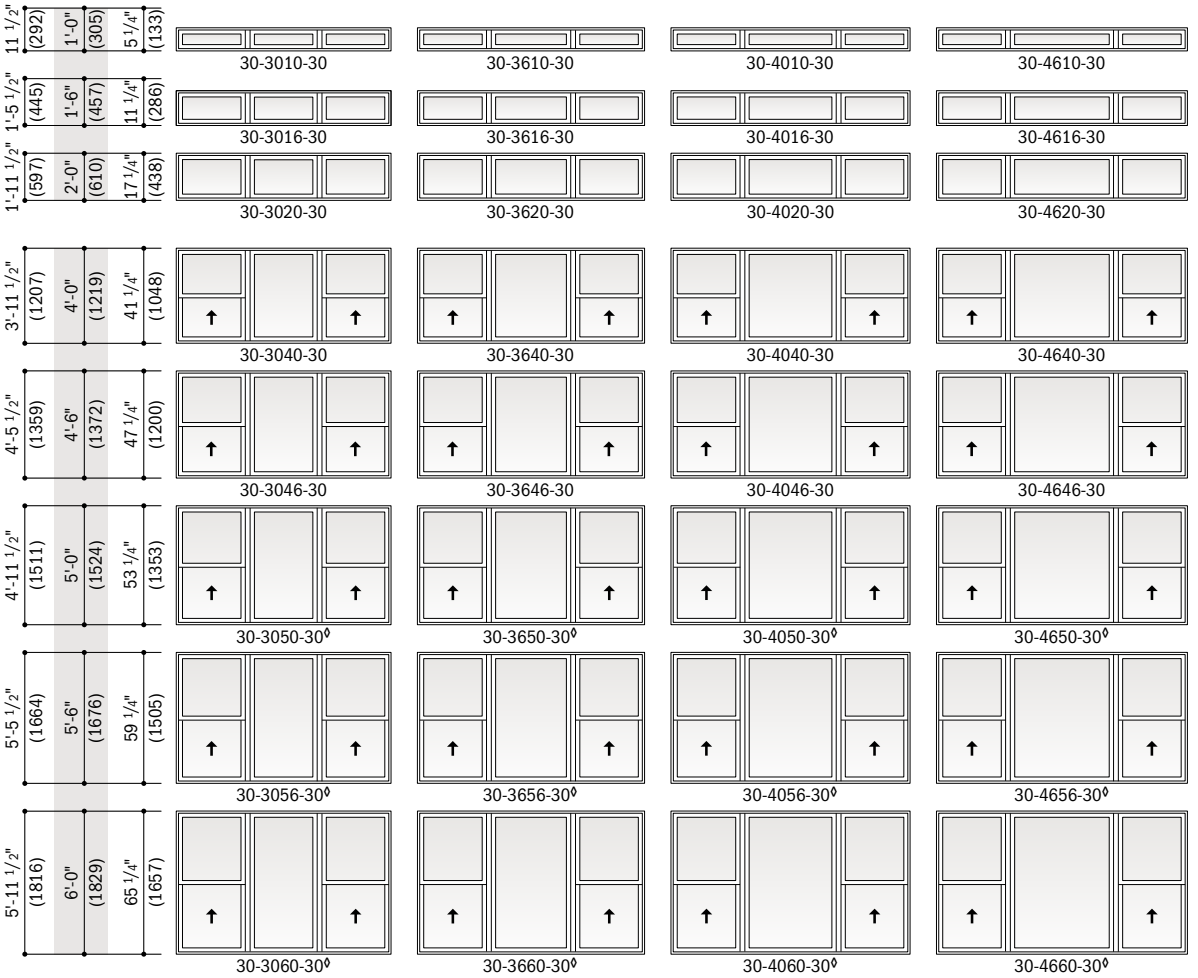

- "Window Dimension" always refers to outside frame-to-frame dimension.
- "**Minimum Rough Opening**" **dimensions may need to be increased to allow for use of building wraps, flashing, sill panning, brackets, fasteners or other items. See page 110 for more details.**
- Dimensions in parentheses are in millimeters.

◊ Meets or exceed clear opening area of 5.7 sq.ft. or 0.53 m², clear opening width of 20" (508) and clear opening height of 24" (610).

10'-11 1/2" (3340)	11'-5 1/2" (3493)	11'-11 1/2" (3645)
11'-0" (3353)	11'-6" (3505)	12'-0" (3658)
53 1/4" (1353)	59 1/4" (1505)	65 1/4" (1657)

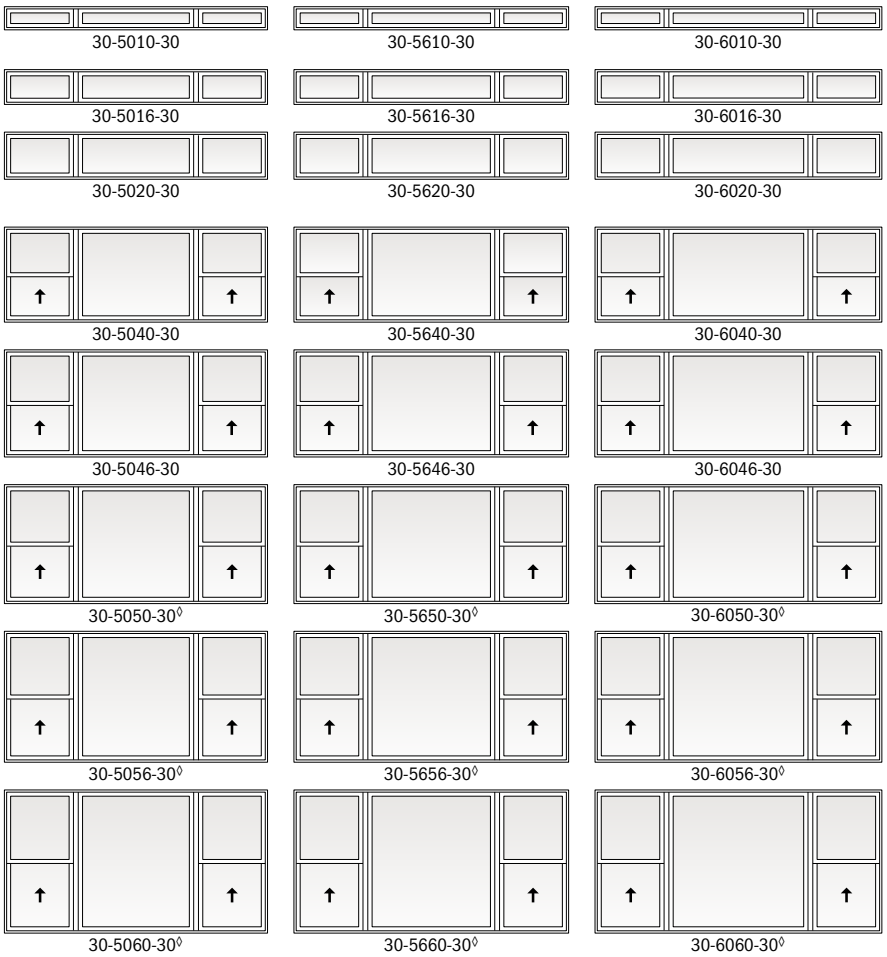

Windows have one continuous outer frame.

Unobstructed glass width dimension of flanking sash is 29 1/4" (743). For unobstructed glass height dimensions of flanking single-hungs, see page 32.

Matching transoms are also shown.

Details shown on pages 50-51.

Grille patterns shown below.

- "Window Dimension" always refers to outside frame-to-frame dimension.
- **"Minimum Rough Opening" dimensions may need to be increased to allow for use of building wraps, flashing, sill panning, brackets, fasteners or other items. See page 110 for more details.**
- Dimensions in parentheses are in millimeters.

◊Meets or exceed clear opening area of 5.7 sq. ft. or 0.53 m², clear opening width of 20" (508) and clear opening height of 24" (610).

Grille Patterns

	Prairie A	Colonial	Short Fractional
Single-Hung	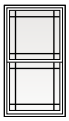	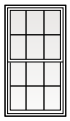	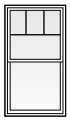

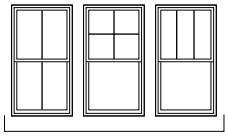

Specified Equal Light Examples

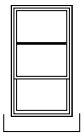

Custom Example*

Single-hung window patterns are also available in Upper Sash Only (USO) configurations. For picture window patterns that require alignment with single-hung patterns, identify the single-hung sash style (equal or reverse cottage) when ordering.

Number of lights and overall pattern varies with window size. Patterns shown may not be available for all sizes. Specified equal light and custom grille patterns are also available. For specified equal light, specify number of same-size rectangles across or down. For more information on divided light, see page 13 or visit **andersenwindows.com/grilles**.

*Grille illustration reflects a window taller than 6'-5 1/2" (1969) with a 2:1 sash ratio.
- Dimensions in parentheses are in millimeters.

Arch Single-Hung Window Details – New Construction

Scale 1 1/2" (38) = 1'-0" (305) — 1:8

1 3/8" flange setback

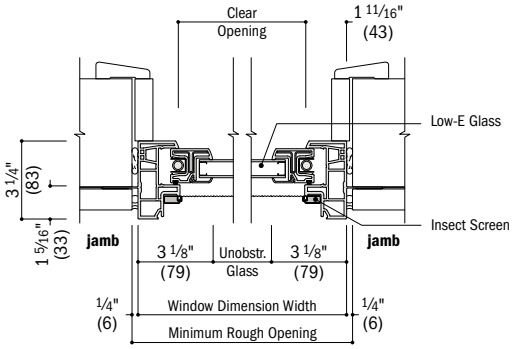

Horizontal Section
Arch Single-Hung

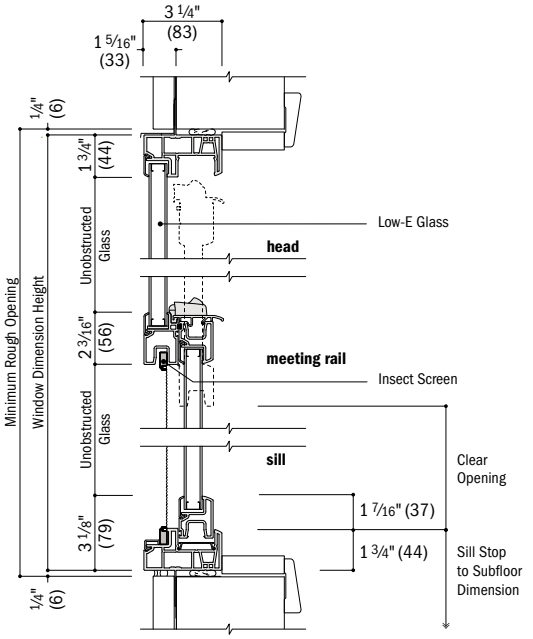

Vertical Section
Arch Single-Hung

1" flange setback with stucco key

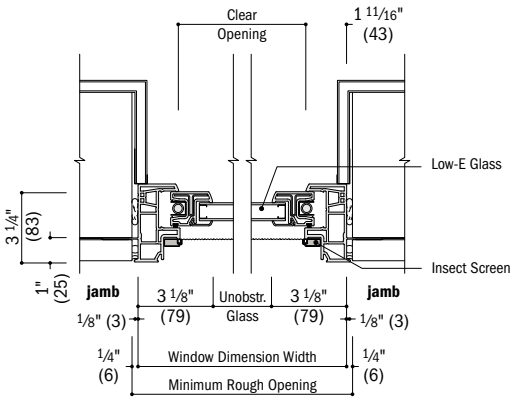

Horizontal Section
Arch Single-Hung - Stucco Exterior

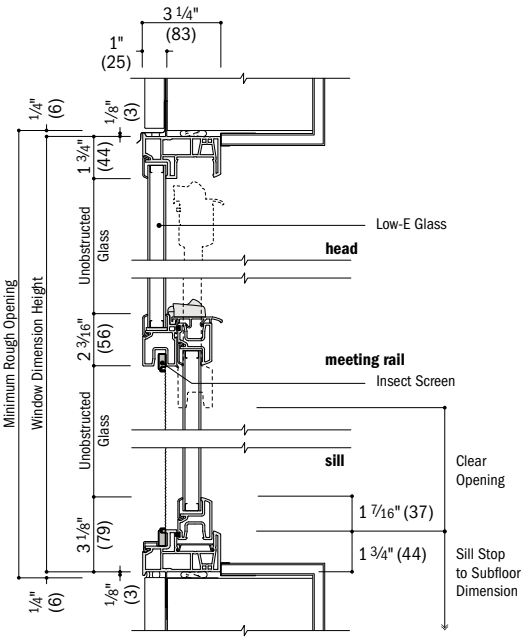

Vertical Section
Arch Single-Hung - Stucco Exterior

- Drip cap is required to complete window installation as shown but may not be included with the window. Use of drip cap is recommended for proper installation.
- Light-colored areas are parts included with window. Dark-colored areas are additional Andersen® parts required to complete window assembly as shown.
- **Minimum rough openings may need to be increased to allow for use of building wraps, flashing, sill panning, brackets, fasteners or other items. See installation information on page 110.**
- Details are for illustration only and are not intended to represent product installation methods or materials. Refer to product installation instructions at andersenwindows.com.
- Dimensions in parentheses are in millimeters.

Arch Single-Hung Window Details – Replacement

Scale 1 1/2" (38) = 1'-0" (305) – 1:8

no flange

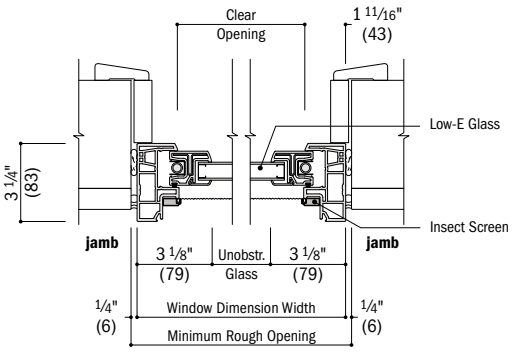

Horizontal Section

Arch Single-Hung - Existing Framed Opening

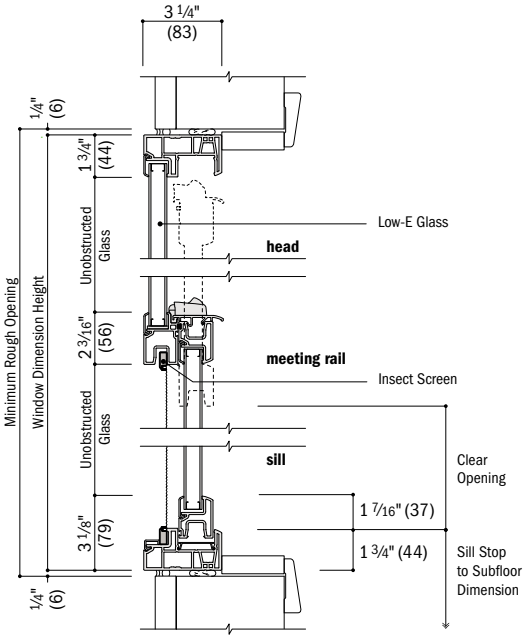

Vertical Section

Arch Single-Hung - Existing Framed Opening

- Drip cap is required to complete window installation as shown but may not be included with the window. Use of drip cap is recommended for proper installation.
- Light-colored areas are parts included with window. Dark-colored areas are additional Andersen® parts required to complete window assembly as shown.
- **Minimum rough openings may need to be increased to allow for use of building wraps, flashing, sill panning, brackets, fasteners or other items. See installation information on page 110.**
- Details are for illustration only and are not intended to represent product installation methods or materials. Refer to product installation instructions at andersenwindows.com.
- Dimensions in parentheses are in millimeters.

Single-Hung Window Details – New Construction

Scale 1 1/2" (38) = 1'-0" (305) — 1:8

1 3/8" flange setback

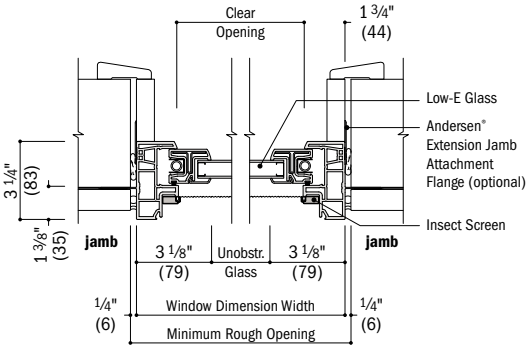

Horizontal Section

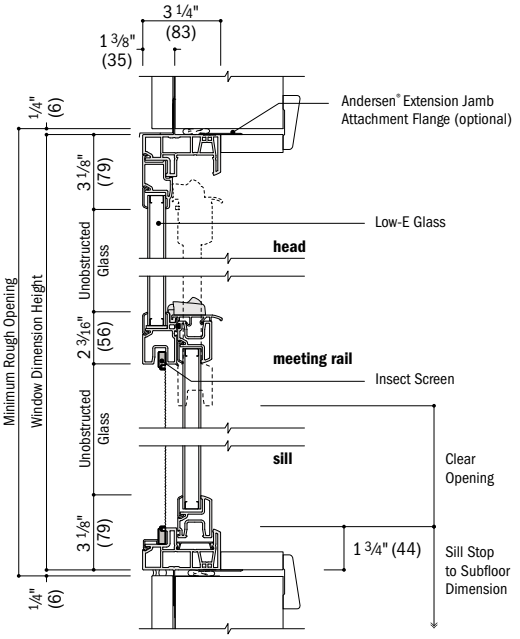

Vertical Section

1" flange setback with stucco key

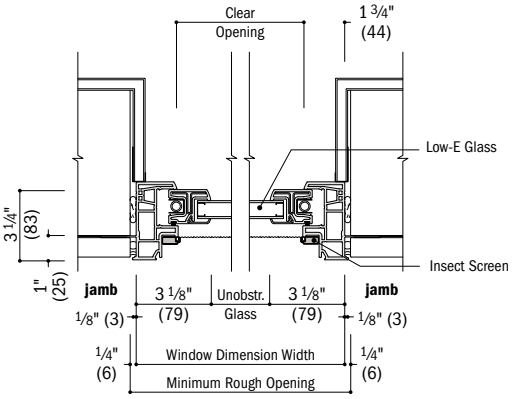

Horizontal Section
Stucco Exterior

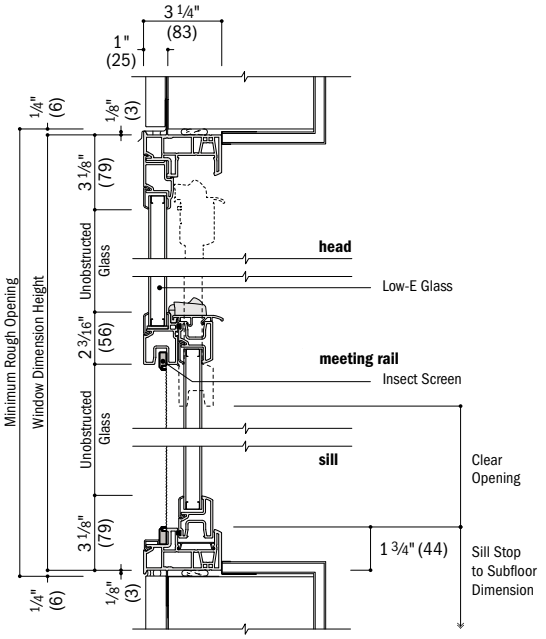

Vertical Section
Stucco Exterior

See pages 84-87 for joining details.

integrals

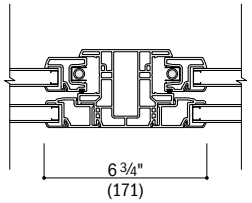

Horizontal Section
Twin or Triple Single-Hung

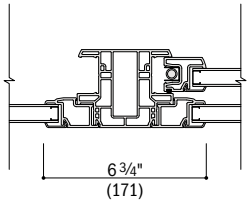

Horizontal Section
Picture With Flanking Single-Hung

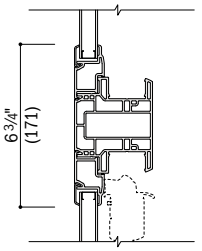

Vertical Section
Transom Over Single-Hung

- Drip cap is required to complete window installation as shown but may not be included with the window. Use of drip cap is recommended for proper installation.
- Light-colored areas are parts included with window. Dark-colored areas are additional Andersen® parts required to complete window assembly as shown.
- **Minimum rough openings may need to be increased to allow for use of building wraps, flashing, sill panning, brackets, fasteners or other items. See installation information on page 110.**
- Details are for illustration only and are not intended to represent product installation methods or materials. Refer to product installation instructions at andersenwindows.com.
- Dimensions in parentheses are in millimeters.

Single-Hung Window Details – Replacement

Scale 1 ½" (38) = 1'-0" (305) – 1:8

no flange

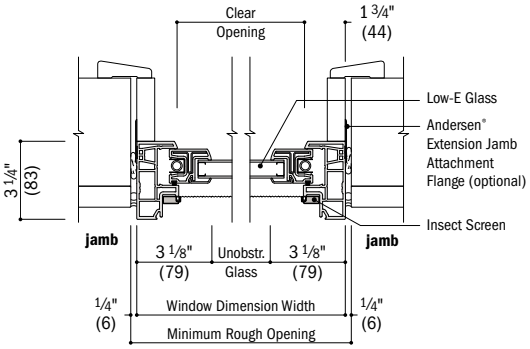

Horizontal Section
Existing Framed Opening

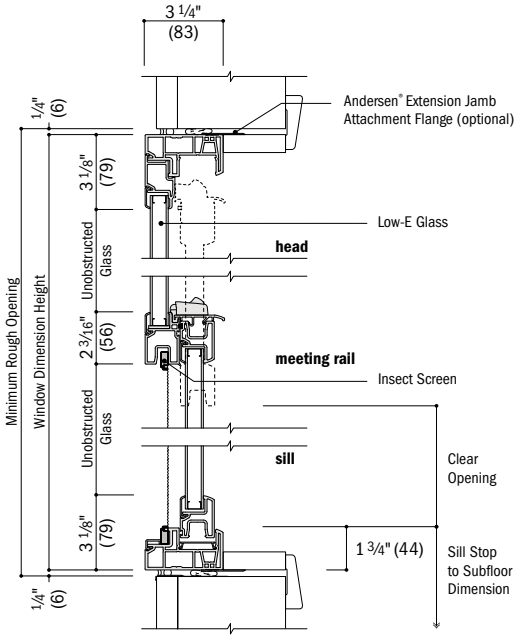

Vertical Section
Existing Framed Opening

insert

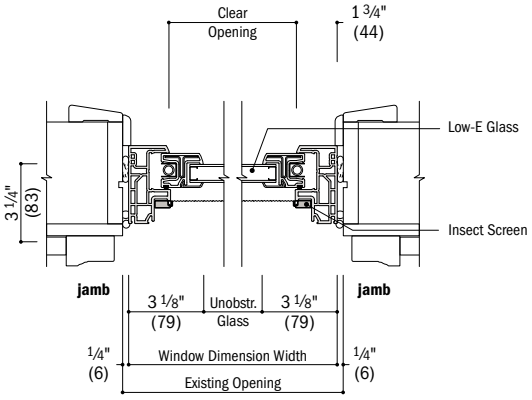

Horizontal Section
Existing Window Opening

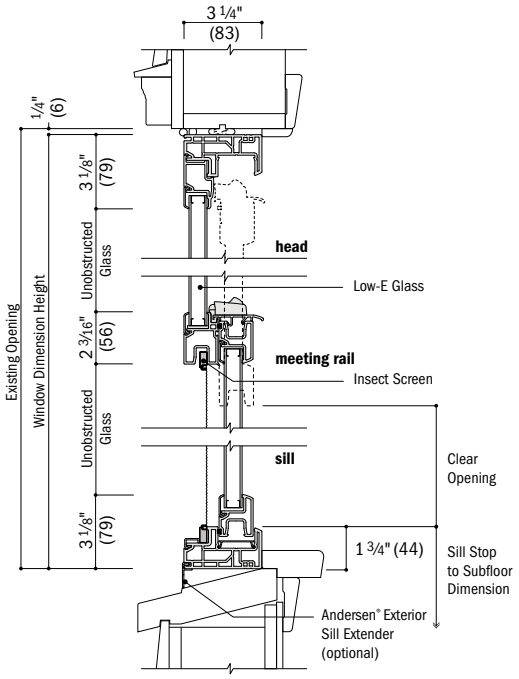

Vertical Section
Existing Window Opening

integrals

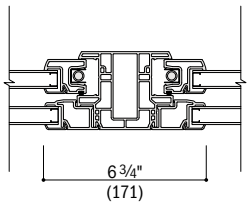

Horizontal Section
Twin or Triple Single-Hung

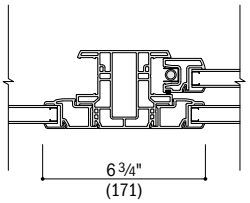

Horizontal Section
Picture With Flanking Single-Hung

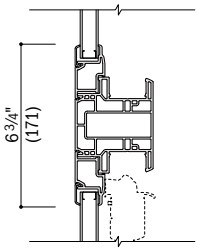

Vertical Section
Transom Over Single-Hung

Installation accessories for insert frame shown on page 109.

See pages 84-87 for joining details.

- Drip cap is required to complete window installation as shown but may not be included with the window. Use of drip cap is recommended for proper installation.
- Light-colored areas are parts included with window. Dark-colored areas are additional Andersen® parts required to complete window assembly as shown.
- **Minimum rough openings may need to be increased to allow for use of building wraps, flashing, sill panning, brackets, fasteners or other items. See installation information on page 110.**
- Details are for illustration only and are not intended to represent product installation methods or materials. Refer to product installation instructions at andersenwindows.com.
- Dimensions in parentheses are in millimeters.

Table of Gliding Window Sizes – Active-Stationary or Stationary-Active (XO/OX) Sash

Scale 1/8" (3) = 1'-0" (305) – 1:96

Window Dimension	1'-11 1/2" (597)	2'-5 1/2" (749)	2'-11 1/2" (902)	3'-5 1/2" (1054)	3'-11 1/2" (1207)	4'-5 1/2" (1359)	4'-11 1/2" (1511)	5'-5 1/2" (1664)	5'-11 1/2" (1816)
Minimum Rough Opening	2'-0" (610)	2'-6" (762)	3'-0" (914)	3'-6" (1067)	4'-0" (1219)	4'-6" (1372)	5'-0" (1524)	5'-6" (1676)	6'-0" (1829)
Unobstructed Glass (width of single sash)	7 9/16" (192)	10 9/16" (268)	13 9/16" (344)	16 9/16" (420)	19 9/16" (496)	22 9/16" (573)	25 9/16" (649)	28 9/16" (725)	31 9/16" (801)

CUSTOM WIDTHS – 23 1/2" to 71 1/2"

CUSTOM HEIGHTS – 11 1/2" to 71 1/2"

Height	1'-11 1/2"	2'-5 1/2"	2'-11 1/2"	3'-5 1/2"	3'-11 1/2"	4'-5 1/2"	4'-11 1/2"	5'-5 1/2"	5'-11 1/2"
11 1/2" (292)	2010	2610	3010	3610	4010	4610	5010	5610	6010
1'-5 1/2" (445)	2016	2616	3016	3616	4016	4616	5016	5616	6016
1'-11 1/2" (597)	2020	2620	3020	3620	4020	4620	5020	5620	6020
2'-5 1/2" (749)	2026	2626	3026	3626	4026	4626	5026	5626	6026◊
2'-11 1/2" (902)	2030	2630	3030	3630	4030	4630	5030◊	5630◊	6030◊
3'-5 1/2" (1054)	2036	2636	3036	3636	4036	4636◊	5036◊	5636◊	6036◊
3'-11 1/2" (1207)	2040	2640	3040	3640	4040◊	4640◊	5040◊	5640◊	6040◊
4'-5 1/2" (1359)	2046	2646	3046	3646	4046◊	4646◊	5046◊	5646◊	6046◊
4'-11 1/2" (1511)	2050	2650	3050	3650	4050◊	4650◊	5050◊	5650◊	6050◊
5'-5 1/2" (1664)	2056	2656	3056	3656	4056◊	4656◊	5056◊	5656◊	6056◊
5'-11 1/2" (1816)	2060	2660	3060	3660	4060◊	4660◊	5060◊	5660◊	6060◊

Custom-size windows are available in 1/8" (3) increments. See page 90 for custom sizes and specifications.

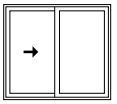

Active-Stationary

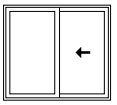

Stationary-Active

Choose active-stationary (**XO**) or stationary-active (**OX**) as viewed from the exterior. Two locks are standard on all heights greater than 4'-2" (1270). Details shown on pages 64-65. Grille patterns shown on page 63.

- "Window Dimension" always refers to outside frame-to-frame dimension.
- "**Minimum Rough Opening**" **dimensions may need to be increased to allow for use of building wraps, flashing, sill panning, brackets, fasteners or other items. See page 110 for more details.**
- Dimensions in parentheses are in millimeters.

◊Meets or exceed clear opening area of 5.7 sq. ft. or 0.53 m^2, clear opening width of 20" (508) and clear opening height of 24" (610). See table on pages 58-59.

Table of Sizes – Picture Over Gliding Window With Active-Stationary or Stationary-Active (XO/OX) Sash

Scale 1/8" (3) = 1'-0" (305) – 1:96

Window Dimension	2'-11 1/2" (902)	3'-11 1/2" (1207)	4'-11 1/2" (1511)	5'-11 1/2" (1816)
Minimum Rough Opening	3'-0" (914)	4'-0" (1219)	5'-0" (1524)	6'-0" (1829)
Unobstructed Glass (upper sash only)	29 1/4" (743)	41 1/4" (1048)	53 1/4" (1353)	65 1/4" (1657)

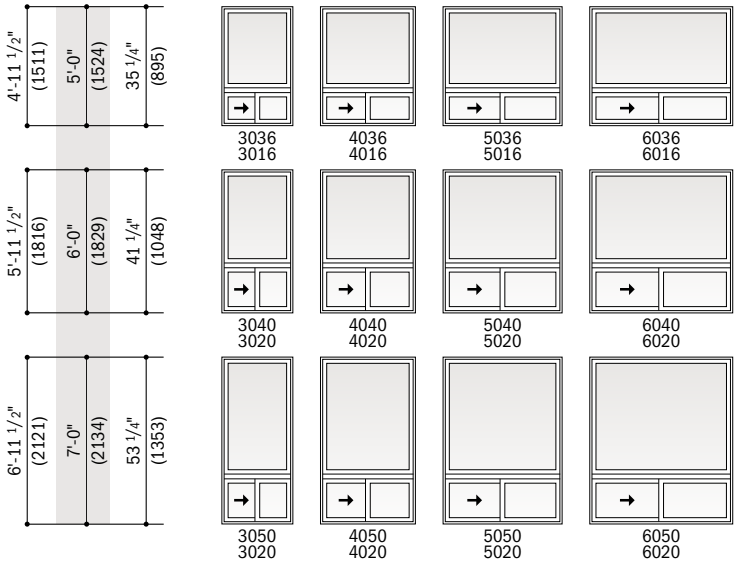

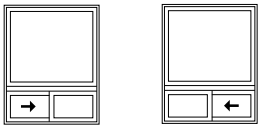

Choose active-stationary (**XO**) or stationary-active (**OX**) as viewed from the exterior. Windows have one continuous outer frame.

For unobstructed glass dimensions of lower sash, see page 52.

Details shown on pages 64-65.

Grille patterns shown on page 63.

- "Window Dimension" always refers to outside frame-to-frame dimension.
- "**Minimum Rough Opening**" **dimensions may need to be increased to allow for use of building wraps, flashing, sill panning, brackets, fasteners or other items. See page 110 for more details.**
- Dimensions in parentheses are in millimeters.

Table Gliding Window Sizes – Active-Stationary-Active (XOX) 1:2:1 Sash Ratio

Notes on next page also apply to this page.

Scale 1/8" (3) = 1'-0" (305) – 1:96

Window Dimension	4'-11 1/2" (1511)	5'-11 1/2" (1816)	6'-11 1/2" (2121)	7'-5 1/2" (2273)	7'-11 1/2" (2426)	8'-5 1/2" (2578)
Minimum Rough Opening	5'-0" (1524)	6'-0" (1829)	7'-0" (2134)	7'-6" (2286)	8'-0" (2438)	8'-6" (2591)
Unobstructed Glass (width of center sash)	27 7/8" (708)	33 7/8" (861)	39 7/8" (1013)	42 7/8" (1089)	45 7/8" (1165)	48 7/8" (1242)
Unobstructed Glass (width of single venting sash)	10 17/32" (267)	13 17/32" (344)	16 17/32" (420)	18 1/32" (458)	19 17/32" (496)	21 1/32" (534)

CUSTOM WIDTHS – 59 1/2" to **143 1/2"**

CUSTOM HEIGHTS – 17 1/2" to **71 1/2"**

1'-5 1/2" (445) 1'-6" (457) 11 1/4" (286)	5016	6016	7016	7616	8016	8616
1'-11 1/2" (597) 2'-0" (610) 17 1/4" (438)	5020	6020	7020	7620	8020	8620
2'-5 1/2" (749) 2'-6" (762) 23 1/4" (591)	5026	6026	7026	7626	8026	8626
2'-11 1/2" (902) 3'-0" (914) 29 1/4" (743)	5030	6030	7030	7630	8030	8630
3'-5 1/2" (1054) 3'-6" (1067) 35 1/4" (895)	5036	6036	7036	7636	8036	8636◊
3'-11 1/2" (1207) 4'-0" (1219) 41 1/4" (1048)	5040	6040	7040	7640	8040◊	8640◊
4'-5 1/2" (1359) 4'-6" (1372) 47 1/4" (1200)	5046	6046	7046	7646	8046◊	8646◊
4'-11 1/2" (1511) 5'-0" (1524) 53 1/4" (1353)	5050	6050	7050	7650	8050◊	8650◊
5'-5 1/2" (1664) 5'-6" (1676) 59 1/4" (1505)	5056	6056	7056	7656	8056◊	8656◊
5'-11 1/2" (1816) 6'-0" (1829) 65 1/4" (1657)	5060	6060	7060	7660	8060◊	8660◊

- "Window Dimension" always refers to outside frame-to-frame dimension.
- "**Minimum Rough Opening**" **dimensions may need to be increased to allow for use of building wraps, flashing, sill panning, brackets, fasteners or other items. See page 110 for more details.**
- Dimensions in parentheses are in millimeters.

◊Meets or exceed clear opening area of 5.7 sq.ft. or 0.53 m², clear opening width of 20" (508) and clear opening height of 24" (610). See table on pages 60-61.

8'-11 1/2" (2731)	9'-11 1/2" (3035)	10'-11 1/2" (3340)	11'-11 1/2" (3645)
9'-0" (2743)	10'-0" (3048)	11'-0" (3353)	12'-0" (3658)
51 7/8" (1318)	57 7/8" (1470)	63 7/8" (1623)	69 7/8" (1775)
22 17/32" (572)	25 17/32" (648)	28 17/32" (725)	31 17/32" (801)

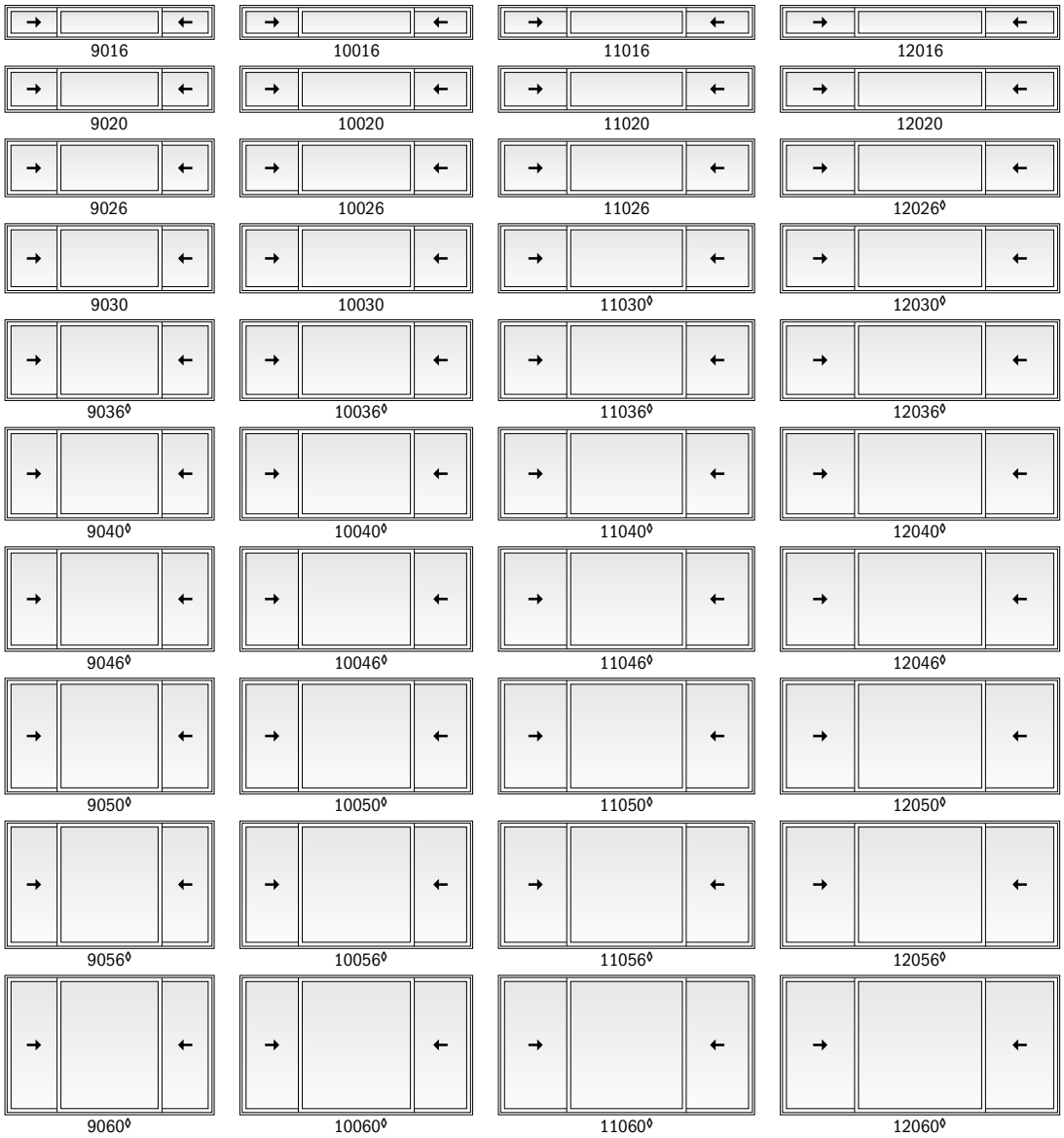

Custom-size windows are available in 1/8" (3) increments. See page 90 for custom sizes and specifications.

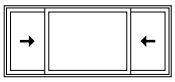

Active-Stationary-Active

Exterior view shown. Sash configuration is active-stationary-active (**XOX**) with a 1:2:1 sash ratio. Two locks for each sash are standard on all heights greater than 4'-2" (1270).

Details shown on pages 64-65. Grille patterns shown on page 63.

• "Window Dimension" always refers to outside frame-to-frame dimension.
• "**Minimum Rough Opening**" **dimensions may need to be increased to allow for use of building wraps, flashing, sill panning, brackets, fasteners or other items. See page 110 for more details.**
• Dimensions in parentheses are in millimeters.
◊Meets or exceed clear opening area of 5.7 sq. ft. or 0.53 m², clear opening width of 20" (508) and clear opening height of 24" (610). See table on pages 60-61.

Table of Sizes – Picture Window Over Gliding With Active-Stationary-Active (XOX) 1:2:1 Sash Ratio

Scale 1/8" (3) = 1'-0" (305) – 1:96

Window Dimension	5'-11 1/2" (1816)	6'-11 1/2" (2121)	7'-11 1/2" (2426)	8'-11 1/2" (2731)
Minimum Rough Opening	6'-0" (1829)	7'-0" (2134)	8'-0" (2438)	9'-0" (2743)
Unobstructed Glass (upper sash only)	65 1/4" (1657)	77 1/4" (1962)	89 1/4" (2267)	101 1/4" (2572)

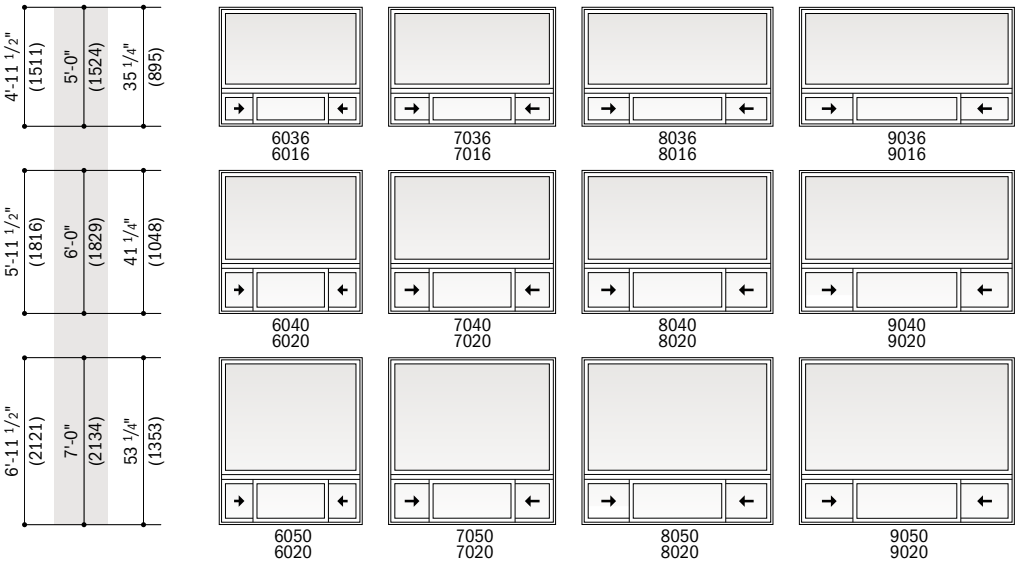

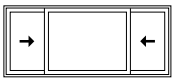

Active-Stationary-Active

Exterior view shown. Lower sash configuration is active-stationary-active (**XOX**) with a 1:2:1 sash ratio. Windows have one continuous outer frame.

For unobstructed glass dimensions of lower sash, see pages 54-55.

Details shown on pages 64-65.

Grille patterns shown on page 63.

- "Window Dimension" always refers to outside frame-to-frame dimension.
- "**Minimum Rough Opening**" **dimensions may need to be increased to allow for use of building wraps, flashing, sill panning, brackets, fasteners or other items. See page 110 for more details.**
- Dimensions in parentheses are in millimeters.

Table of Gliding Window Sizes – Active-Stationary-Active (XOX) 1:1:1 Equal Sash Ratio

Scale 1/8" (3) = 1'-0" (305) – 1:96

Window Dimension	3'-11 1/2" (1207)	4'-11 1/2" (1511)	5'-11 1/2" (1816)	6'-11 1/2" (2121)	7'-5 1/2" (2273)	7'-11 1/2" (2426)	8'-5 1/2" (2578)
Minimum Rough Opening	4'-0" (1219)	5'-0" (1524)	6'-0" (1829)	7'-0" (2134)	7'-6" (2286)	8'-0" (2438)	8'-6" (2591)
Unobstructed Glass (width of center sash)	12 11/32" (313)	16 11/32" (415)	20 11/32" (517)	24 11/32" (618)	26 11/32" (669)	28 11/32" (720)	30 11/32" (771)
Unobstructed Glass (width of single venting sash)	12 9/32" (312)	16 9/32" (414)	20 9/32" (516)	24 9/32" (617)	26 9/32" (668)	28 9/32" (719)	30 9/32" (770)

CUSTOM WIDTHS – 47 1/2" to 101 1/2"

CUSTOM HEIGHTS – 17 1/2" to 71 1/2"

1'-5 1/2" (445) 1'-6" (457) 11 1/4" (286)	4016	5016	6016	7016	7616	8016	8616
1'-11 1/2" (597) 2'-0" (610) 17 1/4" (438)	4020	5020	6020	7020	7620	8020	8620
2'-5 1/2" (749) 2'-6" (762) 23 1/4" (591)	4026	5026	6026	7026	7626	8026	8626
2'-11 1/2" (902) 3'-0" (914) 29 1/4" (743)	4030	5030	6030	7030	7630	8030◊	8630◊
3'-5 1/2" (1054) 3'-6" (1067) 35 1/4" (895)	4036	5036	6036	7036◊	7636◊	8036◊	8636◊
3'-11 1/2" (1207) 4'-0" (1219) 41 1/4" (1048)	4040	5040	6040	7040◊	7640◊	8040◊	8640◊
4'-5 1/2" (1359) 4'-6" (1372) 47 1/4" (1200)	4046	5046	6046	7046◊	7646◊	8046◊	8646◊
4'-11 1/2" (1511) 5'-0" (1524) 53 1/4" (1353)	4050	5050	6050	7050◊	7650◊	8050◊	8650◊
5'-5 1/2" (1664) 5'-6" (1676) 59 1/4" (1505)	4056	5056	6056	7056◊	7656◊	8056◊	8656◊
5'-11 1/2" (1816) 6'-0" (1829) 65 1/4" (1657)	4060	5060	6060	7060◊	7660◊	8060◊	8660◊

Custom-size windows are available in 1/8" (3) increments. See page 90 for custom sizes and specifications.

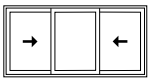

Active-Stationary-Active

Exterior view shown. Sash configuration is active-stationary-active (**XOX**) with a 1:1:1 equal sash ratio. Two locks are standard on all heights greater than 4'-2" (1270). Grille patterns shown on page 63.

- "Window Dimension" always refers to outside frame-to-frame dimension.
- "**Minimum Rough Opening**" **dimensions may need to be increased to allow for use of building wraps, flashing, sill panning, brackets, fasteners or other items. See page 110 for more details.**
- Dimensions in parentheses are in millimeters.

◊Meets or exceed clear opening area of 5.7 sq. ft. or 0.53 m², clear opening width of 20" (508) and clear opening height of 24" (610). See table on pages 62-63.

Gliding Window Opening and Area Specifications – Active-Stationary or Stationary-Active (XO/OX) Sash

Window Number	Clear Opening Area Sq. Ft./(m²)		Clear Opening in Full Open Position Width Inches/(mm)		Height Inches/(mm)		Total Glass Area Sq. Ft./(m²)		Fixed Sash Glass Area Sq. Ft./(m²)		Active Sash Glass Area Sq. Ft./(m²)		Vent Area Sq. Ft./(m²)		Top of Subfloor to Top of Inside Sill Stop Inches/(mm)		Overall Window Area Sq. Ft./(m²)	
2010	0.45	(0.04)	8 1/16"	(204)	8"	(203)	0.55	(0.05)	0.28	(0.03)	0.27	(0.03)	0.45	(0.04)	72 1/2"	(1842)	1.88	(0.17)
2016	0.78	(0.07)	8 1/16"	(204)	14"	(356)	1.18	(0.11)	0.59	(0.05)	0.59	(0.05)	0.78	(0.07)	66 1/2"	(1689)	2.86	(0.27)
2020	1.12	(0.10)	8 1/16"	(204)	20"	(508)	1.81	(0.17)	0.91	(0.08)	0.90	(0.08)	1.12	(0.10)	60 1/2"	(1537)	3.84	(0.36)
2026	1.45	(0.13)	8 1/16"	(204)	26"	(660)	2.44	(0.23)	1.22	(0.11)	1.21	(0.11)	1.45	(0.13)	54 1/2"	(1384)	4.81	(0.45)
2030	1.79	(0.17)	8 1/16"	(204)	32"	(813)	3.07	(0.28)	1.54	(0.14)	1.53	(0.14)	1.79	(0.17)	48 1/2"	(1232)	5.79	(0.54)
2036	2.12	(0.20)	8 1/16"	(204)	38"	(965)	3.69	(0.34)	1.85	(0.17)	1.84	(0.17)	2.12	(0.20)	42 1/2"	(1080)	6.77	(0.63)
2040	2.46	(0.23)	8 1/16"	(204)	44"	(1118)	4.32	(0.40)	2.17	(0.20)	2.16	(0.20)	2.46	(0.23)	36 1/2"	(927)	7.75	(0.72)
2046	2.79	(0.26)	8 1/16"	(204)	50"	(1270)	4.95	(0.46)	2.48	(0.23)	2.47	(0.23)	2.79	(0.26)	30 1/2"	(775)	8.73	(0.81)
2050	3.13	(0.29)	8 1/16"	(204)	56"	(1422)	5.58	(0.52)	2.80	(0.26)	2.78	(0.26)	3.13	(0.29)	24 1/2"	(622)	9.71	(0.90)
2056	3.46	(0.32)	8 1/16"	(204)	62"	(1575)	6.21	(0.58)	3.11	(0.29)	3.10	(0.29)	3.46	(0.32)	18 1/2"	(470)	10.69	(0.99)
2060	3.80	(0.35)	8 1/16"	(204)	68"	(1727)	6.84	(0.64)	3.43	(0.32)	3.41	(0.32)	3.80	(0.35)	12 1/2"	(318)	11.67	(1.08)
2610	0.61	(0.06)	11 1/16"	(280)	8"	(203)	0.77	(0.07)	0.39	(0.04)	0.38	(0.04)	0.61	(0.06)	72 1/2"	(1842)	2.36	(0.22)
2616	1.07	(0.10)	11 1/16"	(280)	14"	(356)	1.65	(0.15)	0.83	(0.08)	0.82	(0.08)	1.07	(0.10)	66 1/2"	(1689)	3.59	(0.33)
2620	1.53	(0.14)	11 1/16"	(280)	20"	(508)	2.53	(0.23)	1.27	(0.12)	1.26	(0.12)	1.53	(0.14)	60 1/2"	(1537)	4.81	(0.45)
2626	1.99	(0.19)	11 1/16"	(280)	26"	(660)	3.41	(0.32)	1.71	(0.16)	1.70	(0.16)	1.99	(0.19)	54 1/2"	(1384)	6.04	(0.56)
2630	2.45	(0.23)	11 1/16"	(280)	32"	(813)	4.28	(0.40)	2.15	(0.20)	2.14	(0.20)	2.45	(0.23)	48 1/2"	(1232)	7.27	(0.68)
2636	2.91	(0.27)	11 1/16"	(280)	38"	(965)	5.16	(0.48)	2.59	(0.24)	2.58	(0.24)	2.91	(0.27)	42 1/2"	(1080)	8.50	(0.79)
2640	3.37	(0.31)	11 1/16"	(280)	44"	(1118)	6.04	(0.56)	3.03	(0.28)	3.01	(0.28)	3.37	(0.31)	36 1/2"	(927)	9.73	(0.90)
2646	3.83	(0.36)	11 1/16"	(280)	50"	(1270)	6.92	(0.64)	3.47	(0.32)	3.45	(0.32)	3.83	(0.36)	30 1/2"	(775)	10.96	(1.02)
2650	4.29	(0.40)	11 1/16"	(280)	56"	(1422)	7.80	(0.72)	3.91	(0.36)	3.89	(0.36)	4.29	(0.40)	24 1/2"	(622)	12.19	(1.13)
2656	4.75	(0.44)	11 1/16"	(280)	62"	(1575)	8.68	(0.81)	4.35	(0.40)	4.33	(0.40)	4.75	(0.44)	18 1/2"	(470)	13.42	(1.25)
2660	5.21	(0.48)	11 1/16"	(280)	68"	(1727)	9.56	(0.89)	4.79	(0.44)	4.77	(0.44)	5.21	(0.48)	12 1/2"	(318)	14.65	(1.36)
3010	0.78	(0.07)	14 1/16"	(357)	8"	(203)	0.99	(0.09)	0.49	(0.05)	0.49	(0.05)	0.78	(0.07)	72 1/2"	(1842)	2.84	(0.26)
3016	1.36	(0.13)	14 1/16"	(357)	14"	(356)	2.12	(0.20)	1.06	(0.10)	1.06	(0.10)	1.36	(0.13)	66 1/2"	(1689)	4.31	(0.40)
3020	1.95	(0.18)	14 1/16"	(357)	20"	(508)	3.25	(0.30)	1.63	(0.15)	1.62	(0.15)	1.95	(0.18)	60 1/2"	(1537)	5.79	(0.54)
3026	2.53	(0.24)	14 1/16"	(357)	26"	(660)	4.37	(0.41)	2.19	(0.20)	2.18	(0.20)	2.53	(0.24)	54 1/2"	(1384)	7.27	(0.68)
3030	3.12	(0.29)	14 1/16"	(357)	32"	(813)	5.50	(0.51)	2.76	(0.26)	2.75	(0.26)	3.12	(0.29)	48 1/2"	(1232)	8.75	(0.81)
3036	3.70	(0.34)	14 1/16"	(357)	38"	(965)	6.63	(0.62)	3.32	(0.31)	3.31	(0.31)	3.70	(0.34)	42 1/2"	(1080)	10.23	(0.95)
3040	4.29	(0.40)	14 1/16"	(357)	44"	(1118)	7.76	(0.72)	3.89	(0.36)	3.87	(0.36)	4.29	(0.40)	36 1/2"	(927)	11.71	(1.09)
3046	4.87	(0.45)	14 1/16"	(357)	50"	(1270)	8.89	(0.83)	4.45	(0.41)	4.44	(0.41)	4.87	(0.45)	30 1/2"	(775)	13.19	(1.23)
3050	5.46	(0.51)	14 1/16"	(357)	56"	(1422)	10.02	(0.93)	5.02	(0.47)	5.00	(0.46)	5.46	(0.51)	24 1/2"	(622)	14.67	(1.36)
3056	6.04	(0.56)	14 1/16"	(357)	62"	(1575)	11.15	(1.04)	5.58	(0.52)	5.56	(0.52)	6.04	(0.56)	18 1/2"	(470)	16.15	(1.50)
3060	6.63	(0.62)	14 1/16"	(357)	68"	(1727)	12.28	(1.14)	6.15	(0.57)	6.13	(0.57)	6.63	(0.62)	12 1/2"	(318)	17.63	(1.64)
3610	0.95	(0.09)	17 1/16"	(433)	8"	(203)	1.21	(0.11)	0.60	(0.06)	0.60	(0.06)	0.95	(0.09)	72 1/2"	(1842)	3.31	(0.31)
3616	1.66	(0.15)	17 1/16"	(433)	14"	(356)	2.59	(0.24)	1.29	(0.12)	1.29	(0.12)	1.66	(0.15)	66 1/2"	(1689)	5.04	(0.47)
3620	2.37	(0.22)	17 1/16"	(433)	20"	(508)	3.96	(0.37)	1.98	(0.18)	1.98	(0.18)	2.37	(0.22)	60 1/2"	(1537)	6.77	(0.63)
3626	3.08	(0.29)	17 1/16"	(433)	26"	(660)	5.34	(0.50)	2.67	(0.25)	2.67	(0.25)	3.08	(0.29)	54 1/2"	(1384)	8.50	(0.79)
3630	3.79	(0.35)	17 1/16"	(433)	32"	(813)	6.72	(0.62)	3.36	(0.31)	3.36	(0.31)	3.79	(0.35)	48 1/2"	(1232)	10.23	(0.95)
3636	4.50	(0.42)	17 1/16"	(433)	38"	(965)	8.10	(0.75)	4.06	(0.38)	4.04	(0.38)	4.50	(0.42)	42 1/2"	(1080)	11.96	(1.11)
3640	5.21	(0.48)	17 1/16"	(433)	44"	(1118)	9.48	(0.88)	4.75	(0.44)	4.73	(0.44)	5.21	(0.48)	36 1/2"	(927)	13.69	(1.27)
3646	5.92	(0.55)	17 1/16"	(433)	50"	(1270)	10.86	(1.01)	5.44	(0.50)	5.42	(0.50)	5.92	(0.55)	30 1/2"	(775)	15.42	(1.43)
3650	6.63	(0.62)	17 1/16"	(433)	56"	(1422)	12.24	(1.14)	6.13	(0.57)	6.11	(0.57)	6.63	(0.62)	24 1/2"	(622)	17.15	(1.59)
3656	7.34	(0.68)	17 1/16"	(433)	62"	(1575)	13.62	(1.26)	6.82	(0.63)	6.80	(0.63)	7.34	(0.68)	18 1/2"	(470)	18.88	(1.75)
3660	8.05	(0.75)	17 1/16"	(433)	68"	(1727)	14.99	(1.39)	7.51	(0.70)	7.49	(0.70)	8.05	(0.75)	12 1/2"	(318)	20.61	(1.91)
4010	1.11	(0.10)	20 1/16"	(509)	8"	(203)	1.43	(0.13)	0.71	(0.07)	0.71	(0.07)	1.11	(0.10)	72 1/2"	(1842)	3.79	(0.35)
4016	1.95	(0.18)	20 1/16"	(509)	14"	(356)	3.05	(0.28)	1.53	(0.14)	1.53	(0.14)	1.95	(0.18)	66 1/2"	(1689)	5.77	(0.54)
4020	2.78	(0.26)	20 1/16"	(509)	20"	(508)	4.68	(0.44)	2.34	(0.22)	2.34	(0.22)	2.78	(0.26)	60 1/2"	(1537)	7.75	(0.72)
4026	3.62	(0.34)	20 1/16"	(509)	26"	(660)	6.31	(0.59)	3.16	(0.29)	3.15	(0.29)	3.62	(0.34)	54 1/2"	(1384)	9.73	(0.90)
4030	4.45	(0.41)	20 1/16"	(509)	32"	(813)	7.94	(0.74)	3.97	(0.37)	3.97	(0.37)	4.45	(0.41)	48 1/2"	(1232)	11.71	(1.09)
4036	5.29	(0.49)	20 1/16"	(509)	38"	(965)	9.57	(0.89)	4.79	(0.44)	4.78	(0.44)	5.29	(0.49)	42 1/2"	(1080)	13.69	(1.27)
4040 ◊	6.12	(0.57)	20 1/16"	(509)	44"	(1118)	11.20	(1.04)	5.60	(0.52)	5.59	(0.52)	6.12	(0.57)	36 1/2"	(927)	15.67	(1.46)
4046 ◊	6.96	(0.65)	20 1/16"	(509)	50"	(1270)	12.83	(1.19)	6.42	(0.60)	6.41	(0.60)	6.96	(0.65)	30 1/2"	(775)	17.65	(1.64)
4050 ◊	7.79	(0.72)	20 1/16"	(509)	56"	(1422)	14.46	(1.34)	7.24	(0.67)	7.22	(0.67)	7.79	(0.72)	24 1/2"	(622)	19.63	(1.82)
4056 ◊	8.63	(0.80)	20 1/16"	(509)	62"	(1575)	16.08	(1.49)	8.05	(0.75)	8.03	(0.75)	8.63	(0.80)	18 1/2"	(470)	21.61	(2.01)
4060 ◊	9.46	(0.88)	20 1/16"	(509)	68"	(1727)	17.71	(1.65)	8.87	(0.82)	8.85	(0.82)	9.46	(0.88)	12 1/2"	(318)	23.59	(2.19)
4610	1.28	(0.12)	23 1/16"	(585)	8"	(203)	1.64	(0.15)	0.82	(0.08)	0.82	(0.08)	1.28	(0.12)	72 1/2"	(1842)	4.27	(0.40)
4616	2.24	(0.21)	23 1/16"	(585)	14"	(356)	3.52	(0.33)	1.76	(0.16)	1.76	(0.16)	2.24	(0.21)	66 1/2"	(1689)	6.50	(0.60)
4620	3.20	(0.30)	23 1/16"	(585)	20"	(508)	5.40	(0.50)	2.70	(0.25)	2.70	(0.25)	3.20	(0.30)	60 1/2"	(1537)	8.73	(0.81)

• "Top of Subfloor to Top of Inside Sill Stop" is calculated based upon a structural header height of 6'-10 1/2" (2096).
• Dimensions in parentheses are in millimeters or square meters.
◊Meets or exceed clear opening area of 5.7 sq. ft. or 0.53 m², clear opening width of 20" (508) and clear opening height of 24" (610).

continued on next page

Gliding Window Opening and Area Specifications – Active-Stationary or Stationary-Active (XO/OX) Sash *(continued)*

Window Number	Clear Opening Area Sq. Ft./(m²)	Clear Opening in Full Open Position Width Inches/(mm)	Clear Opening in Full Open Position Height Inches/(mm)	Total Glass Area Sq. Ft./(m²)	Fixed Sash Glass Area Sq. Ft./(m²)	Active Sash Glass Area Sq. Ft./(m²)	Vent Area Sq. Ft./(m²)	Top of Subfloor to Top of Inside Sill Stop Inches/(mm)	Overall Window Area Sq. Ft./(m²)
4626	4.16 (0.39)	23 1/16" (585)	26" (660)	7.28 (0.68)	3.64 (0.34)	3.64 (0.34)	4.16 (0.39)	54 1/2" (1384)	10.96 (1.02)
4630	5.12 (0.48)	23 1/16" (585)	32" (813)	9.16 (0.85)	4.58 (0.43)	4.58 (0.43)	5.12 (0.48)	48 1/2" (1232)	13.19 (1.23)
4636 ◊	6.08 (0.56)	23 1/16" (585)	38" (965)	11.04 (1.03)	5.52 (0.51)	5.51 (0.51)	6.08 (0.56)	42 1/2" (1080)	15.42 (1.43)
4640 ◊	7.04 (0.65)	23 1/16" (585)	44" (1118)	12.92 (1.20)	6.46 (0.60)	6.45 (0.60)	7.04 (0.65)	36 1/2" (927)	17.65 (1.64)
4646 ◊	8.00 (0.74)	23 1/16" (585)	50" (1270)	14.80 (1.37)	7.40 (0.69)	7.39 (0.69)	8.00 (0.74)	30 1/2" (775)	19.88 (1.85)
4650 ◊	8.96 (0.83)	23 1/16" (585)	56" (1422)	16.67 (1.55)	8.34 (0.78)	8.33 (0.77)	8.96 (0.83)	24 1/2" (622)	22.11 (2.05)
4656 ◊	9.92 (0.92)	23 1/16" (585)	62" (1575)	18.55 (1.72)	9.28 (0.86)	9.27 (0.86)	9.92 (0.92)	18 1/2" (470)	24.34 (2.26)
4660 ◊	10.88 (1.01)	23 1/16" (585)	68" (1727)	20.43 (1.90)	10.23 (0.95)	10.21 (0.95)	10.88 (1.01)	12 1/2" (318)	26.56 (2.47)
5010	1.45 (0.13)	26 1/16" (661)	8" (203)	1.86 (0.17)	0.93 (0.09)	0.93 (0.09)	1.45 (0.13)	72 1/2" (1842)	4.75 (0.44)
5016	2.53 (0.24)	26 1/16" (661)	14" (356)	3.99 (0.37)	2.00 (0.19)	1.99 (0.19)	2.53 (0.24)	66 1/2" (1689)	7.23 (0.67)
5020	3.62 (0.34)	26 1/16" (661)	20" (508)	6.12 (0.57)	3.06 (0.28)	3.06 (0.28)	3.62 (0.34)	60 1/2" (1537)	9.71 (0.90)
5026	4.70 (0.44)	26 1/16" (661)	26" (660)	8.25 (0.77)	4.13 (0.38)	4.12 (0.38)	4.70 (0.44)	54 1/2" (1384)	12.19 (1.13)
5030 ◊	5.79 (0.54)	26 1/16" (661)	32" (813)	10.38 (0.96)	5.19 (0.48)	5.18 (0.48)	5.79 (0.54)	48 1/2" (1232)	14.67 (1.36)
5036 ◊	6.87 (0.64)	26 1/16" (661)	38" (965)	12.51 (1.16)	6.26 (0.58)	6.25 (0.58)	6.87 (0.64)	42 1/2" (1080)	17.15 (1.59)
5040 ◊	7.96 (0.74)	26 1/16" (661)	44" (1118)	14.64 (1.36)	7.32 (0.68)	7.31 (0.68)	7.96 (0.74)	36 1/2" (927)	19.63 (1.82)
5046 ◊	9.04 (0.84)	26 1/16" (661)	50" (1270)	16.76 (1.56)	8.39 (0.78)	8.38 (0.78)	9.04 (0.84)	30 1/2" (775)	22.11 (2.05)
5050 ◊	10.13 (0.94)	26 1/16" (661)	56" (1422)	18.89 (1.76)	9.45 (0.88)	9.44 (0.88)	10.13 (0.94)	24 1/2" (622)	24.59 (2.28)
5056 ◊	11.21 (1.04)	26 1/16" (661)	62" (1575)	21.02 (1.95)	10.52 (0.98)	10.50 (0.98)	11.21 (1.04)	18 1/2" (470)	27.06 (2.51)
5060 ◊	12.30 (1.14)	26 1/16" (661)	68" (1727)	23.15 (2.15)	11.58 (1.08)	11.57 (1.07)	12.30 (1.14)	12 1/2" (318)	29.54 (2.74)
5610	1.61 (0.15)	29 1/16" (738)	8" (203)	2.08 (0.19)	1.04 (0.10)	1.04 (0.10)	1.61 (0.15)	72 1/2" (1842)	5.23 (0.49)
5616	2.82 (0.26)	29 1/16" (738)	14" (356)	4.46 (0.41)	2.23 (0.21)	2.23 (0.21)	2.82 (0.26)	66 1/2" (1689)	7.96 (0.74)
5620	4.03 (0.37)	29 1/16" (738)	20" (508)	6.84 (0.64)	3.42 (0.32)	3.42 (0.32)	4.03 (0.37)	60 1/2" (1537)	10.69 (0.99)
5626	5.24 (0.49)	29 1/16" (738)	26" (660)	9.22 (0.86)	4.61 (0.43)	4.61 (0.43)	5.24 (0.49)	54 1/2" (1384)	13.42 (1.25)
5630 ◊	6.45 (0.60)	29 1/16" (738)	32" (813)	11.60 (1.08)	5.80 (0.54)	5.79 (0.54)	6.45 (0.60)	48 1/2" (1232)	16.15 (1.50)
5636 ◊	7.66 (0.71)	29 1/16" (738)	38" (965)	13.98 (1.30)	6.99 (0.65)	6.98 (0.65)	7.66 (0.71)	42 1/2" (1080)	18.88 (1.75)
5640 ◊	8.87 (0.82)	29 1/16" (738)	44" (1118)	16.35 (1.52)	8.18 (0.76)	8.17 (0.76)	8.87 (0.82)	36 1/2" (927)	21.61 (2.01)
5646 ◊	10.08 (0.94)	29 1/16" (738)	50" (1270)	18.73 (1.74)	9.37 (0.87)	9.36 (0.87)	10.08 (0.94)	30 1/2" (775)	24.34 (2.26)
5650 ◊	11.29 (1.05)	29 1/16" (738)	56" (1422)	21.11 (1.96)	10.56 (0.98)	10.55 (0.98)	11.29 (1.05)	24 1/2" (622)	27.06 (2.51)
5656 ◊	12.50 (1.16)	29 1/16" (738)	62" (1575)	23.49 (2.18)	11.75 (1.09)	11.74 (1.09)	12.50 (1.16)	18 1/2" (470)	29.79 (2.77)
5660 ◊	13.71 (1.27)	29 1/16" (738)	68" (1727)	25.87 (2.40)	12.94 (1.20)	12.92 (1.20)	13.71 (1.27)	12 1/2" (318)	32.52 (3.02)
6010	1.78 (0.17)	32 1/16" (814)	8" (203)	2.30 (0.21)	1.15 (0.11)	1.15 (0.11)	1.78 (0.17)	72 1/2" (1842)	5.71 (0.53)
6016	3.11 (0.29)	32 1/16" (814)	14" (356)	4.93 (0.46)	2.47 (0.23)	2.46 (0.23)	3.11 (0.29)	66 1/2" (1689)	8.69 (0.81)
6020	4.45 (0.41)	32 1/16" (814)	20" (508)	7.56 (0.70)	3.78 (0.35)	3.78 (0.35)	4.45 (0.41)	60 1/2" (1537)	11.67 (1.08)
6026 ◊	5.78 (0.54)	32 1/16" (814)	26" (660)	10.19 (0.95)	5.10 (0.47)	5.09 (0.47)	5.78 (0.54)	54 1/2" (1384)	14.65 (1.36)
6030 ◊	7.12 (0.66)	32 1/16" (814)	32" (813)	12.82 (1.19)	6.41 (0.60)	6.40 (0.59)	7.12 (0.66)	48 1/2" (1232)	17.63 (1.64)
6036 ◊	8.45 (0.79)	32 1/16" (814)	38" (965)	15.44 (1.43)	7.73 (0.72)	7.72 (0.72)	8.45 (0.79)	42 1/2" (1080)	20.61 (1.91)
6040 ◊	9.79 (0.91)	32 1/16" (814)	44" (1118)	18.07 (1.68)	9.04 (0.84)	9.03 (0.84)	9.79 (0.91)	36 1/2" (927)	23.59 (2.19)
6046 ◊	11.12 (1.03)	32 1/16" (814)	50" (1270)	20.70 (1.92)	10.36 (0.96)	10.34 (0.96)	11.12 (1.03)	30 1/2" (775)	26.56 (2.47)
6050 ◊	12.46 (1.16)	32 1/16" (814)	56" (1422)	23.33 (2.17)	11.67 (1.08)	11.66 (1.08)	12.46 (1.16)	24 1/2" (622)	29.54 (2.74)
6056 ◊	13.79 (1.28)	32 1/16" (814)	62" (1575)	25.96 (2.41)	12.99 (1.21)	12.97 (1.21)	13.79 (1.28)	18 1/2" (470)	32.52 (3.02)
6060 ◊	15.13 (1.41)	32 1/16" (814)	68" (1727)	28.59 (2.66)	14.30 (1.33)	14.28 (1.33)	15.13 (1.41)	12 1/2" (318)	35.50 (3.30)

• "Top of Subfloor to Top of Inside Sill Stop" is calculated based upon a structural header height of 6'-10 1/2" (2096).
• Dimensions in parentheses are in millimeters or square meters.
◊Meets or exceed clear opening area of 5.7 sq. ft. or 0.53 m², clear opening width of 20" (508) and clear opening height of 24" (610).

Gliding Window Opening and Area Specifications – Active-Stationary-Active (XOX) 1:2:1 Sash Ratio

Window Number	Clear Opening Area Sq. Ft./(m²)		Clear Opening in Full Open Position Width Inches/(mm)		Height Inches/(mm)		Total Glass Area Sq. Ft./(m²)		Fixed Sash Glass Area Sq. Ft./(m²)		Single Active Sash Glass Area Sq. Ft./(m²)		Vent Area Sq. Ft./(m²)		Top of Subfloor to Top of Inside Sill Stop Inches/(mm)		Overall Window Area Sq. Ft./(m²)	
5016	1.16	(0.11)	11 7/8"	(302)	14"	(356)	3.82	(0.36)	2.18	(0.20)	0.82	(0.08)	2.31	(0.21)	66 1/2"	(1689)	7.23	(0.67)
5020	1.65	(0.15)	11 7/8"	(302)	20"	(508)	5.86	(0.54)	3.34	(0.31)	1.26	(0.12)	3.31	(0.31)	60 1/2"	(1537)	9.71	(0.90)
5026	2.15	(0.20)	11 7/8"	(302)	26"	(660)	7.90	(0.73)	4.50	(0.42)	1.70	(0.16)	4.30	(0.40)	54 1/2"	(1384)	12.19	(1.13)
5030	2.64	(0.25)	11 7/8"	(302)	32"	(813)	9.94	(0.92)	5.66	(0.53)	2.14	(0.20)	5.29	(0.49)	48 1/2"	(1232)	14.67	(1.36)
5036	3.14	(0.29)	11 7/8"	(302)	38"	(965)	11.98	(1.11)	6.83	(0.63)	2.58	(0.24)	6.28	(0.58)	42 1/2"	(1080)	17.15	(1.59)
5040	3.64	(0.34)	11 7/8"	(302)	44"	(1118)	14.02	(1.30)	7.99	(0.74)	3.01	(0.28)	7.27	(0.68)	36 1/2"	(927)	19.63	(1.82)
5046	4.13	(0.38)	11 7/8"	(302)	50"	(1270)	16.06	(1.49)	9.15	(0.85)	3.45	(0.32)	8.26	(0.77)	30 1/2"	(775)	22.11	(2.05)
5050	4.63	(0.43)	11 7/8"	(302)	56"	(1422)	18.09	(1.68)	10.31	(0.96)	3.89	(0.36)	9.25	(0.86)	24 1/2"	(622)	24.59	(2.28)
5056	5.12	(0.48)	11 7/8"	(302)	62"	(1575)	20.13	(1.87)	11.47	(1.07)	4.33	(0.40)	10.25	(0.95)	18 1/2"	(470)	27.06	(2.51)
5060	5.62	(0.52)	11 7/8"	(302)	68"	(1727)	22.17	(2.06)	12.63	(1.17)	4.77	(0.44)	11.24	(1.04)	12 1/2"	(318)	29.54	(2.74)
6016	1.45	(0.13)	14 7/8"	(378)	14"	(356)	4.76	(0.44)	2.65	(0.25)	1.06	(0.10)	2.90	(0.27)	66 1/2"	(1689)	8.69	(0.81)
6020	2.07	(0.19)	14 7/8"	(378)	20"	(508)	7.30	(0.68)	4.06	(0.38)	1.62	(0.15)	4.14	(0.38)	60 1/2"	(1537)	11.67	(1.08)
6026	2.69	(0.25)	14 7/8"	(378)	26"	(660)	9.84	(0.91)	5.47	(0.51)	2.18	(0.20)	5.38	(0.50)	54 1/2"	(1384)	14.65	(1.36)
6030	3.31	(0.31)	14 7/8"	(378)	32"	(813)	12.38	(1.15)	6.88	(0.64)	2.75	(0.26)	6.62	(0.62)	48 1/2"	(1232)	17.63	(1.64)
6036	3.93	(0.37)	14 7/8"	(378)	38"	(965)	14.92	(1.39)	8.29	(0.77)	3.31	(0.31)	7.86	(0.73)	42 1/2"	(1080)	20.61	(1.91)
6040	4.55	(0.42)	14 7/8"	(378)	44"	(1118)	17.45	(1.62)	9.71	(0.90)	3.87	(0.36)	9.10	(0.85)	36 1/2"	(927)	23.59	(2.19)
6046	5.17	(0.48)	14 7/8"	(378)	50"	(1270)	19.99	(1.86)	11.12	(1.03)	4.44	(0.41)	10.35	(0.96)	30 1/2"	(775)	26.56	(2.47)
6050	5.79	(0.54)	14 7/8"	(378)	56"	(1422)	22.53	(2.09)	12.53	(1.16)	5.00	(0.46)	11.59	(1.08)	24 1/2"	(622)	29.54	(2.74)
6056	6.41	(0.60)	14 7/8"	(378)	62"	(1575)	25.07	(2.33)	13.94	(1.30)	5.56	(0.52)	12.83	(1.19)	18 1/2"	(470)	32.52	(3.02)
6060	7.04	(0.65)	14 7/8"	(378)	68"	(1727)	27.61	(2.56)	15.35	(1.43)	6.13	(0.57)	14.07	(1.31)	12 1/2"	(318)	35.50	(3.30)
7016	1.74	(0.16)	17 7/8"	(455)	14"	(356)	5.70	(0.53)	3.12	(0.29)	1.29	(0.12)	3.48	(0.32)	66 1/2"	(1689)	10.15	(0.94)
7020	2.49	(0.23)	17 7/8"	(455)	20"	(508)	8.74	(0.81)	4.78	(0.44)	1.98	(0.18)	4.97	(0.46)	60 1/2"	(1537)	13.63	(1.27)
7026	3.23	(0.30)	17 7/8"	(455)	26"	(660)	11.78	(1.09)	6.44	(0.60)	2.67	(0.25)	6.46	(0.60)	54 1/2"	(1384)	17.11	(1.59)
7030	3.98	(0.37)	17 7/8"	(455)	32"	(813)	14.81	(1.38)	8.10	(0.75)	3.36	(0.31)	7.96	(0.74)	48 1/2"	(1232)	20.59	(1.91)
7036	4.72	(0.44)	17 7/8"	(455)	38"	(965)	17.85	(1.66)	9.76	(0.91)	4.04	(0.38)	9.45	(0.88)	42 1/2"	(1080)	24.06	(2.24)
7040	5.47	(0.51)	17 7/8"	(455)	44"	(1118)	20.89	(1.94)	11.42	(1.06)	4.73	(0.44)	10.94	(1.02)	36 1/2"	(927)	27.54	(2.56)
7046	6.21	(0.58)	17 7/8"	(455)	50"	(1270)	23.93	(2.22)	13.09	(1.22)	5.42	(0.50)	12.43	(1.15)	30 1/2"	(775)	31.02	(2.88)
7050	6.96	(0.65)	17 7/8"	(455)	56"	(1422)	26.97	(2.51)	14.75	(1.37)	6.11	(0.57)	13.92	(1.29)	24 1/2"	(622)	34.50	(3.21)
7056	7.71	(0.72)	17 7/8"	(455)	62"	(1575)	30.01	(2.79)	16.41	(1.52)	6.80	(0.63)	15.41	(1.43)	18 1/2"	(470)	37.98	(3.53)
7060	8.45	(0.79)	17 7/8"	(455)	68"	(1727)	33.05	(3.07)	18.07	(1.68)	7.49	(0.70)	16.90	(1.57)	12 1/2"	(318)	41.46	(3.85)
7616	1.89	(0.18)	19 3/8"	(493)	14"	(356)	6.17	(0.57)	3.35	(0.31)	1.41	(0.13)	3.77	(0.35)	66 1/2"	(1689)	10.88	(1.01)
7620	2.69	(0.25)	19 3/8"	(493)	20"	(508)	9.46	(0.88)	5.14	(0.48)	2.16	(0.20)	5.39	(0.50)	60 1/2"	(1537)	14.61	(1.36)
7626	3.50	(0.33)	19 3/8"	(493)	26"	(660)	12.74	(1.18)	6.92	(0.64)	2.91	(0.27)	7.01	(0.65)	54 1/2"	(1384)	18.34	(1.70)
7630	4.31	(0.40)	19 3/8"	(493)	32"	(813)	16.03	(1.49)	8.71	(0.81)	3.66	(0.34)	8.62	(0.80)	48 1/2"	(1232)	22.06	(2.05)
7636	5.12	(0.48)	19 3/8"	(493)	38"	(965)	19.32	(1.80)	10.50	(0.98)	4.41	(0.41)	10.24	(0.95)	42 1/2"	(1080)	25.79	(2.40)
7640	5.93	(0.55)	19 3/8"	(493)	44"	(1118)	22.61	(2.10)	12.28	(1.14)	5.16	(0.48)	11.85	(1.10)	36 1/2"	(927)	29.52	(2.74)
7646	6.74	(0.63)	19 3/8"	(493)	50"	(1270)	25.90	(2.41)	14.07	(1.31)	5.91	(0.55)	13.47	(1.25)	30 1/2"	(775)	33.25	(3.09)
7650	7.54	(0.70)	19 3/8"	(493)	56"	(1422)	29.19	(2.71)	15.86	(1.47)	6.67	(0.62)	15.09	(1.40)	24 1/2"	(622)	36.98	(3.44)
7656	8.35	(0.78)	19 3/8"	(493)	62"	(1575)	32.48	(3.02)	17.64	(1.64)	7.42	(0.69)	16.70	(1.55)	18 1/2"	(470)	40.71	(3.78)
7660	9.16	(0.85)	19 3/8"	(493)	68"	(1727)	35.77	(3.32)	19.43	(1.81)	8.17	(0.76)	18.32	(1.70)	12 1/2"	(318)	44.44	(4.13)
8016	2.03	(0.19)	20 7/8"	(531)	14"	(356)	6.64	(0.62)	3.58	(0.33)	1.53	(0.14)	4.06	(0.38)	66 1/2"	(1689)	11.61	(1.08)
8020	2.90	(0.27)	20 7/8"	(531)	20"	(508)	10.17	(0.95)	5.50	(0.51)	2.34	(0.22)	5.81	(0.54)	60 1/2"	(1537)	15.59	(1.45)
8026	3.77	(0.35)	20 7/8"	(531)	26"	(660)	13.71	(1.27)	7.41	(0.69)	3.15	(0.29)	7.55	(0.70)	54 1/2"	(1384)	19.56	(1.82)
8030	4.64	(0.43)	20 7/8"	(531)	32"	(813)	17.25	(1.60)	9.32	(0.87)	3.97	(0.37)	9.29	(0.86)	48 1/2"	(1232)	23.54	(2.19)
8036	5.52	(0.51)	20 7/8"	(531)	38"	(965)	20.79	(1.93)	11.23	(1.04)	4.78	(0.44)	11.03	(1.02)	42 1/2"	(1080)	27.52	(2.56)
8040 ◊	6.39	(0.59)	20 7/8"	(531)	44"	(1118)	24.33	(2.26)	13.14	(1.22)	5.59	(0.52)	12.77	(1.19)	36 1/2"	(927)	31.50	(2.93)
8046 ◊	7.26	(0.67)	20 7/8"	(531)	50"	(1270)	27.87	(2.59)	15.06	(1.40)	6.41	(0.60)	14.51	(1.35)	30 1/2"	(775)	35.48	(3.30)
8050 ◊	8.13	(0.76)	20 7/8"	(531)	56"	(1422)	31.41	(2.92)	16.97	(1.58)	7.22	(0.67)	16.25	(1.51)	24 1/2"	(622)	39.46	(3.67)
8056 ◊	9.00	(0.84)	20 7/8"	(531)	62"	(1575)	34.95	(3.25)	18.88	(1.75)	8.03	(0.75)	18.00	(1.67)	18 1/2"	(470)	43.44	(4.04)
8060 ◊	9.87	(0.92)	20 7/8"	(531)	68"	(1727)	38.48	(3.58)	20.79	(1.93)	8.85	(0.82)	19.74	(1.83)	12 1/2"	(318)	47.42	(4.41)
8616	2.18	(0.20)	22 3/8"	(569)	14"	(356)	7.10	(0.66)	3.82	(0.35)	1.64	(0.15)	4.36	(0.40)	66 1/2"	(1689)	12.34	(1.15)
8620	3.11	(0.29)	22 3/8"	(569)	20"	(508)	10.89	(1.01)	5.86	(0.54)	2.52	(0.23)	6.22	(0.58)	60 1/2"	(1537)	16.56	(1.54)
8626	4.04	(0.38)	22 3/8"	(569)	26"	(660)	14.68	(1.36)	7.89	(0.73)	3.39	(0.32)	8.09	(0.75)	54 1/2"	(1384)	20.79	(1.93)
8630	4.98	(0.46)	22 3/8"	(569)	32"	(813)	18.47	(1.72)	9.93	(0.92)	4.27	(0.40)	9.96	(0.92)	48 1/2"	(1232)	25.02	(2.32)
8636 ◊	5.91	(0.55)	22 3/8"	(569)	38"	(965)	22.26	(2.07)	11.97	(1.11)	5.15	(0.48)	11.82	(1.10)	42 1/2"	(1080)	29.25	(2.72)
8640 ◊	6.84	(0.64)	22 3/8"	(569)	44"	(1118)	26.05	(2.42)	14.00	(1.30)	6.02	(0.56)	13.69	(1.27)	36 1/2"	(927)	33.48	(3.11)
8646 ◊	7.78	(0.72)	22 3/8"	(569)	50"	(1270)	29.84	(2.77)	16.04	(1.49)	6.90	(0.64)	15.55	(1.45)	30 1/2"	(775)	37.71	(3.50)
8650 ◊	8.71	(0.81)	22 3/8"	(569)	56"	(1422)	33.63	(3.12)	18.08	(1.68)	7.77	(0.72)	17.42	(1.62)	24 1/2"	(622)	41.94	(3.90)

• "Top of Subfloor to Top of Inside Sill Stop" is calculated based upon a structural header height of 6'-10 1/2" (2096).
• Dimensions in parentheses are in millimeters or square meters.
◊Meets or exceed clear opening area of 5.7 sq. ft. or 0.53 m², clear opening width of 20" (508) and clear opening height of 24" (610).

continued on next page

Gliding Window Opening and Area Specifications – Active-Stationary-Active (XOX) 1:2:1 Sash Ratio *(continued)*

Window Number	Clear Opening Area Sq. Ft./(m²)		Clear Opening in Full Open Position Width Inches/(mm)		Clear Opening in Full Open Position Height Inches/(mm)		Total Glass Area Sq. Ft./(m²)		Fixed Sash Glass Area Sq. Ft./(m²)		Single Active Sash Glass Area Sq. Ft./(m²)		Vent Area Sq. Ft./(m²)		Top of Subfloor to Top of Inside Sill Stop Inches/(mm)		Overall Window Area Sq. Ft./(m²)	
8656◊	9.64	(0.90)	22 3/8"	(569)	62"	(1575)	37.41	(3.48)	20.11	(1.87)	8.65	(0.80)	19.29	(1.79)	18 1/2"	(470)	46.17	(4.29)
8660◊	10.58	(0.98)	22 3/8"	(569)	68"	(1727)	41.20	(3.83)	22.15	(2.06)	9.53	(0.89)	21.15	(1.97)	12 1/2"	(318)	50.40	(4.68)
9016	2.32	(0.22)	23 7/8"	(607)	14"	(356)	7.57	(0.70)	4.05	(0.38)	1.76	(0.16)	4.65	(0.43)	66 1/2"	(1689)	13.06	(1.21)
9020	3.32	(0.31)	23 7/8"	(607)	20"	(508)	11.61	(1.08)	6.22	(0.58)	2.70	(0.25)	6.64	(0.62)	60 1/2"	(1537)	17.54	(1.63)
9026	4.32	(0.40)	23 7/8"	(607)	26"	(660)	15.65	(1.45)	8.38	(0.78)	3.64	(0.34)	8.63	(0.80)	54 1/2"	(1384)	22.02	(2.05)
9030	5.31	(0.49)	23 7/8"	(607)	32"	(813)	19.69	(1.83)	10.54	(0.98)	4.58	(0.43)	10.62	(0.99)	48 1/2"	(1232)	26.50	(2.46)
9036◊	6.31	(0.59)	23 7/8"	(607)	38"	(965)	23.73	(2.20)	12.70	(1.18)	5.51	(0.51)	12.61	(1.17)	42 1/2"	(1080)	30.98	(2.88)
9040◊	7.30	(0.68)	23 7/8"	(607)	44"	(1118)	27.77	(2.58)	14.86	(1.38)	6.45	(0.60)	14.60	(1.36)	36 1/2"	(927)	35.46	(3.29)
9046◊	8.30	(0.77)	23 7/8"	(607)	50"	(1270)	31.81	(2.95)	17.02	(1.58)	7.39	(0.69)	16.60	(1.54)	30 1/2"	(775)	39.94	(3.71)
9050◊	9.29	(0.86)	23 7/8"	(607)	56"	(1422)	35.84	(3.33)	19.19	(1.78)	8.33	(0.77)	18.59	(1.73)	24 1/2"	(622)	44.42	(4.13)
9056◊	10.29	(0.96)	23 7/8"	(607)	62"	(1575)	39.88	(3.71)	21.35	(1.98)	9.27	(0.86)	20.58	(1.91)	18 1/2"	(470)	48.90	(4.54)
9060◊	11.29	(1.05)	23 7/8"	(607)	68"	(1727)	43.92	(4.08)	23.51	(2.18)	10.21	(0.95)	22.57	(2.10)	12 1/2"	(318)	53.38	(4.96)
10016	2.62	(0.24)	26 7/8"	(683)	14"	(356)	8.51	(0.79)	4.52	(0.42)	1.99	(0.19)	5.23	(0.49)	66 1/2"	(1689)	14.52	(1.35)
10020	3.74	(0.35)	26 7/8"	(683)	20"	(508)	13.05	(1.21)	6.93	(0.64)	3.06	(0.28)	7.47	(0.69)	60 1/2"	(1537)	19.50	(1.81)
10026	4.86	(0.45)	26 7/8"	(683)	26"	(660)	17.59	(1.63)	9.35	(0.87)	4.12	(0.38)	9.71	(0.90)	54 1/2"	(1384)	24.48	(2.27)
10030	5.98	(0.56)	26 7/8"	(683)	32"	(813)	22.13	(2.06)	11.76	(1.09)	5.18	(0.48)	11.96	(1.11)	48 1/2"	(1232)	29.46	(2.74)
10036◊	7.10	(0.66)	26 7/8"	(683)	38"	(965)	26.67	(2.48)	14.17	(1.32)	6.25	(0.58)	14.20	(1.32)	42 1/2"	(1080)	34.44	(3.20)
10040◊	8.22	(0.76)	26 7/8"	(683)	44"	(1118)	31.20	(2.90)	16.58	(1.54)	7.31	(0.68)	16.44	(1.53)	36 1/2"	(927)	39.42	(3.66)
10046◊	9.34	(0.87)	26 7/8"	(683)	50"	(1270)	35.74	(3.32)	18.99	(1.76)	8.38	(0.78)	18.68	(1.74)	30 1/2"	(775)	44.40	(4.12)
10050◊	10.46	(0.97)	26 7/8"	(683)	56"	(1422)	40.28	(3.74)	21.40	(1.99)	9.44	(0.88)	20.92	(1.94)	24 1/2"	(622)	49.38	(4.59)
10056◊	11.58	(1.08)	26 7/8"	(683)	62"	(1575)	44.82	(4.16)	23.82	(2.21)	10.50	(0.98)	23.16	(2.15)	18 1/2"	(470)	54.36	(5.05)
10060◊	12.70	(1.18)	26 7/8"	(683)	68"	(1727)	49.36	(4.59)	26.23	(2.44)	11.57	(1.07)	25.40	(2.36)	12 1/2"	(318)	59.34	(5.51)
11016	2.91	(0.27)	29 7/8"	(759)	14"	(356)	9.45	(0.88)	4.99	(0.46)	2.23	(0.21)	5.81	(0.54)	66 1/2"	(1689)	15.98	(1.48)
11020	4.15	(0.39)	29 7/8"	(759)	20"	(508)	14.49	(1.35)	7.65	(0.71)	3.42	(0.32)	8.31	(0.77)	60 1/2"	(1537)	21.46	(1.99)
11026	5.40	(0.50)	29 7/8"	(759)	26"	(660)	19.53	(1.81)	10.31	(0.96)	4.61	(0.43)	10.80	(1.00)	54 1/2"	(1384)	26.94	(2.50)
11030◊	6.64	(0.62)	29 7/8"	(759)	32"	(813)	24.56	(2.28)	12.98	(1.21)	5.79	(0.54)	13.29	(1.23)	48 1/2"	(1232)	32.42	(3.01)
11036◊	7.89	(0.73)	29 7/8"	(759)	38"	(965)	29.60	(2.75)	15.64	(1.45)	6.98	(0.65)	15.78	(1.47)	42 1/2"	(1080)	37.90	(3.52)
11040◊	9.14	(0.85)	29 7/8"	(759)	44"	(1118)	34.64	(3.22)	18.30	(1.70)	8.17	(0.76)	18.27	(1.70)	36 1/2"	(927)	43.38	(4.03)
11046◊	10.38	(0.96)	29 7/8"	(759)	50"	(1270)	39.68	(3.69)	20.96	(1.95)	9.36	(0.87)	20.76	(1.93)	30 1/2"	(775)	48.86	(4.54)
11050◊	11.63	(1.08)	29 7/8"	(759)	56"	(1422)	44.72	(4.15)	23.62	(2.19)	10.55	(0.98)	23.25	(2.16)	24 1/2"	(622)	54.34	(5.05)
11056◊	12.87	(1.20)	29 7/8"	(759)	62"	(1575)	49.76	(4.62)	26.28	(2.44)	11.74	(1.09)	25.75	(2.39)	18 1/2"	(470)	59.81	(5.56)
11060◊	14.12	(1.31)	29 7/8"	(759)	68"	(1727)	54.80	(5.09)	28.95	(2.69)	12.92	(1.20)	28.24	(2.62)	12 1/2"	(318)	65.29	(6.07)
12016	3.20	(0.30)	32 7/8"	(836)	14"	(356)	10.39	(0.96)	5.46	(0.51)	2.46	(0.23)	6.40	(0.59)	66 1/2"	(1689)	17.44	(1.62)
12020	4.57	(0.42)	32 7/8"	(836)	20"	(508)	15.92	(1.48)	8.37	(0.78)	3.78	(0.35)	9.14	(0.85)	60 1/2"	(1537)	23.42	(2.18)
12026◊	5.94	(0.55)	32 7/8"	(836)	26"	(660)	21.46	(1.99)	11.28	(1.05)	5.09	(0.47)	11.88	(1.10)	54 1/2"	(1384)	29.40	(2.73)
12030◊	7.31	(0.68)	32 7/8"	(836)	32"	(813)	27.00	(2.51)	14.19	(1.32)	6.40	(0.59)	14.62	(1.36)	48 1/2"	(1232)	35.38	(3.29)
12036◊	8.68	(0.81)	32 7/8"	(836)	38"	(965)	32.54	(3.02)	17.11	(1.59)	7.72	(0.72)	17.36	(1.61)	42 1/2"	(1080)	41.36	(3.84)
12040◊	10.05	(0.93)	32 7/8"	(836)	44"	(1118)	38.08	(3.54)	20.02	(1.86)	9.03	(0.84)	20.10	(1.87)	36 1/2"	(927)	47.34	(4.40)
12046◊	11.42	(1.06)	32 7/8"	(836)	50"	(1270)	43.62	(4.05)	22.93	(2.13)	10.34	(0.96)	22.85	(2.12)	30 1/2"	(775)	53.31	(4.95)
12050◊	12.79	(1.19)	32 7/8"	(836)	56"	(1422)	49.16	(4.57)	25.84	(2.40)	11.66	(1.08)	25.59	(2.38)	24 1/2"	(622)	59.29	(5.51)
12056◊	14.16	(1.32)	32 7/8"	(836)	62"	(1575)	54.70	(5.08)	28.75	(2.67)	12.97	(1.21)	28.33	(2.63)	18 1/2"	(470)	65.27	(6.06)
12060◊	15.54	(1.44)	32 7/8"	(836)	68"	(1727)	60.23	(5.60)	31.67	(2.94)	14.28	(1.33)	31.07	(2.89)	12 1/2"	(318)	71.25	(6.62)

• "Top of Subfloor to Top of Inside Sill Stop" is calculated based upon a structural header height of 6'-10 1/2" (2096).
• Dimensions in parentheses are in millimeters or square meters.
◊Meets or exceed clear opening area of 5.7 sq. ft. or 0.53 m², clear opening width of 20" (508) and clear opening height of 24" (610).

Gliding Window Opening and Area Specifications – Active-Stationary-Active (XOX) 1:1:1 Equal Sash Ratio

Window Number	Clear Opening Area Sq. Ft./(m²)	Clear Opening in Full Open Position Width Inches/(mm)	Clear Opening in Full Open Position Height Inches/(mm)	Total Glass Area Sq. Ft./(m²)	Fixed Sash Glass Area Sq. Ft./(m²)	Single Active Sash Glass Area Sq. Ft./(m²)	Vent Area Sq. Ft./(m²)	Top of Subfloor to Top of Inside Sill Stop Inches/(mm)	Overall Window Area Sq. Ft./(m²)
4016	1.04 (0.10)	10 5/8" (271)	14" (356)	2.89 (0.27)	0.96 (0.09)	0.96 (0.09)	2.07 (0.19)	66 1/2" (1689)	5.77 (0.54)
4020	1.48 (0.14)	10 5/8" (271)	20" (508)	4.42 (0.41)	1.48 (0.14)	1.47 (0.14)	2.96 (0.28)	60 1/2" (1537)	7.75 (0.72)
4026	1.93 (0.18)	10 5/8" (271)	26" (660)	5.96 (0.55)	1.99 (0.19)	1.99 (0.18)	3.85 (0.36)	54 1/2" (1384)	9.73 (0.90)
4030	2.37 (0.22)	10 5/8" (271)	32" (813)	7.50 (0.70)	2.51 (0.23)	2.50 (0.23)	4.74 (0.44)	48 1/2" (1232)	11.71 (1.09)
4036	2.82 (0.26)	10 5/8" (271)	38" (965)	9.04 (0.84)	3.02 (0.28)	3.01 (0.28)	5.63 (0.52)	42 1/2" (1080)	13.69 (1.27)
4040	3.26 (0.30)	10 5/8" (271)	44" (1118)	10.58 (0.98)	3.53 (0.33)	3.52 (0.33)	6.52 (0.61)	36 1/2" (927)	15.67 (1.46)
4046	3.70 (0.34)	10 5/8" (271)	50" (1270)	12.12 (1.13)	4.05 (0.38)	4.03 (0.37)	7.41 (0.69)	30 1/2" (775)	17.65 (1.64)
4050	4.15 (0.39)	10 5/8" (271)	56" (1422)	13.66 (1.27)	4.56 (0.42)	4.55 (0.42)	8.30 (0.77)	24 1/2" (622)	19.63 (1.82)
4056	4.59 (0.43)	10 5/8" (271)	62" (1575)	15.20 (1.41)	5.08 (0.47)	5.06 (0.47)	9.19 (0.85)	18 1/2" (470)	21.61 (2.01)
4060	5.04 (0.47)	10 5/8" (271)	68" (1727)	16.73 (1.55)	5.59 (0.52)	5.57 (0.52)	10.08 (0.94)	12 1/2" (318)	23.59 (2.19)
5016	1.43 (0.13)	14 5/8" (373)	14" (356)	3.82 (0.36)	1.28 (0.12)	1.27 (0.12)	2.85 (0.26)	66 1/2" (1689)	7.23 (0.67)
5020	2.04 (0.19)	14 5/8" (373)	20" (508)	5.86 (0.54)	1.96 (0.18)	1.95 (0.18)	4.07 (0.38)	60 1/2" (1537)	9.71 (0.90)
5026	2.65 (0.25)	14 5/8" (373)	26" (660)	7.90 (0.73)	2.64 (0.25)	2.63 (0.24)	5.30 (0.49)	54 1/2" (1384)	12.19 (1.13)
5030	3.26 (0.30)	14 5/8" (373)	32" (813)	9.94 (0.92)	3.32 (0.31)	3.31 (0.31)	6.52 (0.61)	48 1/2" (1232)	14.67 (1.36)
5036	3.87 (0.36)	14 5/8" (373)	38" (965)	11.98 (1.11)	4.00 (0.37)	3.99 (0.37)	7.74 (0.72)	42 1/2" (1080)	17.15 (1.59)
5040	4.48 (0.42)	14 5/8" (373)	44" (1118)	14.02 (1.30)	4.68 (0.43)	4.67 (0.43)	8.96 (0.83)	36 1/2" (927)	19.63 (1.82)
5046	5.09 (0.47)	14 5/8" (373)	50" (1270)	16.06 (1.49)	5.36 (0.50)	5.35 (0.50)	10.19 (0.95)	30 1/2" (775)	22.11 (2.05)
5050	5.70 (0.53)	14 5/8" (373)	56" (1422)	18.09 (1.68)	6.04 (0.56)	6.03 (0.56)	11.41 (1.06)	24 1/2" (622)	24.59 (2.28)
5056	6.32 (0.59)	14 5/8" (373)	62" (1575)	20.13 (1.87)	6.72 (0.62)	6.71 (0.62)	12.63 (1.17)	18 1/2" (470)	27.06 (2.51)
5060	6.93 (0.64)	14 5/8" (373)	68" (1727)	22.17 (2.06)	7.40 (0.69)	7.38 (0.69)	13.85 (1.29)	12 1/2" (318)	29.54 (2.74)
6016	1.82 (0.17)	18 5/8" (474)	14" (356)	4.76 (0.44)	1.59 (0.15)	1.59 (0.15)	3.63 (0.34)	66 1/2" (1689)	8.69 (0.81)
6020	2.59 (0.24)	18 5/8" (474)	20" (508)	7.30 (0.68)	2.44 (0.23)	2.43 (0.23)	5.19 (0.48)	60 1/2" (1537)	11.67 (1.08)
6026	3.37 (0.31)	18 5/8" (474)	26" (660)	9.84 (0.91)	3.28 (0.31)	3.28 (0.30)	6.74 (0.63)	54 1/2" (1384)	14.65 (1.36)
6030	4.15 (0.39)	18 5/8" (474)	32" (813)	12.38 (1.15)	4.13 (0.38)	4.12 (0.38)	8.30 (0.77)	48 1/2" (1232)	17.63 (1.64)
6036	4.93 (0.46)	18 5/8" (474)	38" (965)	14.92 (1.39)	4.98 (0.46)	4.97 (0.46)	9.85 (0.92)	42 1/2" (1080)	20.61 (1.91)
6040	5.70 (0.53)	18 5/8" (474)	44" (1118)	17.45 (1.62)	5.83 (0.54)	5.81 (0.54)	11.41 (1.06)	36 1/2" (927)	23.59 (2.19)
6046	6.48 (0.60)	18 5/8" (474)	50" (1270)	19.99 (1.86)	6.67 (0.62)	6.66 (0.62)	12.96 (1.20)	30 1/2" (775)	26.56 (2.47)
6050	7.26 (0.67)	18 5/8" (474)	56" (1422)	22.53 (2.09)	7.52 (0.70)	7.51 (0.70)	14.52 (1.35)	24 1/2" (622)	29.54 (2.74)
6056	8.04 (0.75)	18 5/8" (474)	62" (1575)	25.07 (2.33)	8.37 (0.78)	8.35 (0.78)	16.08 (1.49)	18 1/2" (470)	32.52 (3.02)
6060	8.82 (0.82)	18 5/8" (474)	68" (1727)	27.61 (2.56)	9.22 (0.86)	9.20 (0.85)	17.63 (1.64)	12 1/2" (318)	35.50 (3.30)
7016	2.20 (0.20)	22 5/8" (576)	14" (356)	5.70 (0.53)	1.90 (0.18)	1.90 (0.18)	4.41 (0.41)	66 1/2" (1689)	10.15 (0.94)
7020	3.15 (0.29)	22 5/8" (576)	20" (508)	8.74 (0.81)	2.92 (0.27)	2.91 (0.27)	6.30 (0.59)	60 1/2" (1537)	13.63 (1.27)
7026	4.09 (0.38)	22 5/8" (576)	26" (660)	11.78 (1.09)	3.93 (0.37)	3.92 (0.36)	8.19 (0.76)	54 1/2" (1384)	17.11 (1.59)
7030	5.04 (0.47)	22 5/8" (576)	32" (813)	14.81 (1.38)	4.94 (0.46)	4.94 (0.46)	10.08 (0.94)	48 1/2" (1232)	20.59 (1.91)
7036 ◊	5.98 (0.56)	22 5/8" (576)	38" (965)	17.85 (1.66)	5.96 (0.55)	5.95 (0.55)	11.96 (1.11)	42 1/2" (1080)	24.06 (2.24)
7040 ◊	6.93 (0.64)	22 5/8" (576)	44" (1118)	20.89 (1.94)	6.97 (0.65)	6.96 (0.65)	13.85 (1.29)	36 1/2" (927)	27.54 (2.56)
7046 ◊	7.87 (0.73)	22 5/8" (576)	50" (1270)	23.93 (2.22)	7.99 (0.74)	7.97 (0.74)	15.74 (1.46)	30 1/2" (775)	31.02 (2.88)
7050 ◊	8.82 (0.82)	22 5/8" (576)	56" (1422)	26.97 (2.51)	9.00 (0.84)	8.98 (0.83)	17.63 (1.64)	24 1/2" (622)	34.50 (3.21)
7056 ◊	9.76 (0.91)	22 5/8" (576)	62" (1575)	30.01 (2.79)	10.01 (0.93)	10.00 (0.93)	19.52 (1.81)	18 1/2" (470)	37.98 (3.53)
7060 ◊	10.70 (0.99)	22 5/8" (576)	68" (1727)	33.05 (3.07)	11.03 (1.02)	11.01 (1.02)	21.41 (1.99)	12 1/2" (318)	41.46 (3.85)
7616	2.40 (0.22)	24 5/8" (627)	14" (356)	6.17 (0.57)	2.06 (0.19)	2.05 (0.19)	4.80 (0.45)	66 1/2" (1689)	10.88 (1.01)
7620	3.43 (0.32)	24 5/8" (627)	20" (508)	9.46 (0.88)	3.15 (0.29)	3.15 (0.29)	6.85 (0.64)	60 1/2" (1537)	14.61 (1.36)
7626	4.45 (0.41)	24 5/8" (627)	26" (660)	12.74 (1.18)	4.25 (0.40)	4.25 (0.39)	8.91 (0.83)	54 1/2" (1384)	18.34 (1.70)
7630	5.48 (0.51)	24 5/8" (627)	32" (813)	16.03 (1.49)	5.35 (0.50)	5.34 (0.50)	10.96 (1.02)	48 1/2" (1232)	22.06 (2.05)
7636 ◊	6.51 (0.60)	24 5/8" (627)	38" (965)	19.32 (1.80)	6.45 (0.60)	6.44 (0.60)	13.02 (1.21)	42 1/2" (1080)	25.79 (2.40)
7640 ◊	7.54 (0.70)	24 5/8" (627)	44" (1118)	22.61 (2.10)	7.54 (0.70)	7.53 (0.70)	15.08 (1.40)	36 1/2" (927)	29.52 (2.74)
7646 ◊	8.57 (0.80)	24 5/8" (627)	50" (1270)	25.90 (2.41)	8.64 (0.80)	8.63 (0.80)	17.13 (1.59)	30 1/2" (775)	33.25 (3.09)
7650 ◊	9.59 (0.89)	24 5/8" (627)	56" (1422)	29.19 (2.71)	9.74 (0.90)	9.72 (0.90)	19.19 (1.78)	24 1/2" (622)	36.98 (3.44)
7656 ◊	10.62 (0.99)	24 5/8" (627)	62" (1575)	32.48 (3.02)	10.84 (1.01)	10.82 (1.01)	21.24 (1.97)	18 1/2" (470)	40.71 (3.78)
7660 ◊	11.65 (1.08)	24 5/8" (627)	68" (1727)	35.77 (3.32)	11.93 (1.11)	11.92 (1.11)	23.30 (2.16)	12 1/2" (318)	44.44 (4.13)
8016	2.59 (0.24)	26 5/8" (677)	14" (356)	6.64 (0.62)	2.21 (0.21)	2.21 (0.21)	5.19 (0.48)	66 1/2" (1689)	11.61 (1.08)
8020	3.70 (0.34)	26 5/8" (677)	20" (508)	10.17 (0.95)	3.39 (0.32)	3.39 (0.31)	7.41 (0.69)	60 1/2" (1537)	15.59 (1.45)
8026	4.82 (0.45)	26 5/8" (677)	26" (660)	13.71 (1.27)	4.58 (0.43)	4.57 (0.42)	9.63 (0.89)	54 1/2" (1384)	19.56 (1.82)
8030 ◊	5.93 (0.55)	26 5/8" (677)	32" (813)	17.25 (1.60)	5.76 (0.53)	5.75 (0.53)	11.85 (1.10)	48 1/2" (1232)	23.54 (2.19)
8036 ◊	7.04 (0.65)	26 5/8" (677)	38" (965)	20.79 (1.93)	6.94 (0.64)	6.93 (0.64)	14.08 (1.31)	42 1/2" (1080)	27.52 (2.56)
8040 ◊	8.15 (0.76)	26 5/8" (677)	44" (1118)	24.33 (2.26)	8.12 (0.75)	8.11 (0.75)	16.30 (1.51)	36 1/2" (927)	31.50 (2.93)
8046 ◊	9.26 (0.86)	26 5/8" (677)	50" (1270)	27.87 (2.59)	9.30 (0.86)	9.28 (0.86)	18.52 (1.72)	30 1/2" (775)	35.48 (3.30)
8050 ◊	10.37 (0.96)	26 5/8" (677)	56" (1422)	31.41 (2.92)	10.48 (0.97)	10.46 (0.97)	20.74 (1.93)	24 1/2" (622)	39.46 (3.67)

• "Top of Subfloor to Top of Inside Sill Stop" is calculated based upon a structural header height of 6'-10 1/2" (2096).
• Dimensions in parentheses are in millimeters or square meters.
◊ Meets or exceed clear opening area of 5.7 sq. ft. or 0.53 m², clear opening width of 20" (508) and clear opening height of 24" (610).

continued on next page

Gliding Window Opening and Area Specifications – Active-Stationary-Active (XOX) 1:1:1 Equal Sash Ratio *(continued)*

Window Number	Clear Opening Area Sq. Ft./(m²)		Clear Opening in Full Open Position Width Inches/(mm)		Height Inches/(mm)		Total Glass Area Sq. Ft./(m²)		Fixed Sash Glass Area Sq. Ft./(m²)		Single Active Sash Glass Area Sq. Ft./(m²)		Vent Area Sq. Ft./(m²)		Top of Subfloor to Top of Inside Sill Stop Inches/(mm)		Overall Window Area Sq. Ft./(m²)	
8056 ◊	11.48	(1.07)	26 5/8"	(677)	62"	(1575)	34.95	(3.25)	11.66	(1.08)	11.64	(1.08)	22.97	(2.13)	18 1/2"	(470)	43.44	(4.04)
8060 ◊	12.59	(1.17)	26 5/8"	(677)	68"	(1727)	38.48	(3.58)	12.84	(1.19)	12.82	(1.19)	25.19	(2.34)	12 1/2"	(318)	47.42	(4.41)
8616	2.79	(0.26)	28 5/8"	(728)	14"	(356)	7.10	(0.66)	2.37	(0.22)	2.37	(0.22)	5.57	(0.52)	66 1/2"	(1689)	12.34	(1.15)
8620	3.98	(0.37)	28 5/8"	(728)	20"	(508)	10.89	(1.01)	3.63	(0.34)	3.63	(0.34)	7.96	(0.74)	60 1/2"	(1537)	16.56	(1.54)
8626	5.18	(0.48)	28 5/8"	(728)	26"	(660)	14.68	(1.36)	4.90	(0.46)	4.89	(0.45)	10.35	(0.96)	54 1/2"	(1384)	20.79	(1.93)
8630 ◊	6.37	(0.59)	28 5/8"	(728)	32"	(813)	18.47	(1.72)	6.16	(0.57)	6.15	(0.57)	12.74	(1.18)	48 1/2"	(1232)	25.02	(2.32)
8636 ◊	7.57	(0.70)	28 5/8"	(728)	38"	(965)	22.26	(2.07)	7.43	(0.69)	7.42	(0.69)	15.13	(1.41)	42 1/2"	(1080)	29.25	(2.72)
8640 ◊	8.76	(0.81)	28 5/8"	(728)	44"	(1118)	26.05	(2.42)	8.69	(0.81)	8.68	(0.81)	17.52	(1.63)	36 1/2"	(927)	33.48	(3.11)
8646 ◊	9.95	(0.92)	28 5/8"	(728)	50"	(1270)	29.84	(2.77)	9.95	(0.92)	9.94	(0.92)	19.91	(1.85)	30 1/2"	(775)	37.71	(3.50)
8650 ◊	11.15	(1.04)	28 5/8"	(728)	56"	(1422)	33.63	(3.12)	11.22	(1.04)	11.20	(1.04)	22.30	(2.07)	24 1/2"	(622)	41.94	(3.90)
8656 ◊	12.34	(1.15)	28 5/8"	(728)	62"	(1575)	37.41	(3.48)	12.48	(1.16)	12.47	(1.16)	24.69	(2.29)	18 1/2"	(470)	46.17	(4.29)
8660 ◊	13.54	(1.26)	28 5/8"	(728)	68"	(1727)	41.20	(3.83)	13.75	(1.28)	13.73	(1.28)	27.08	(2.52)	12 1/2"	(318)	50.40	(4.68)

• "Top of Subfloor to Top of Inside Sill Stop" is calculated based upon a structural header height of 6'-10 1/2" (2096).
• Dimensions in parentheses are in millimeters or square meters.
◊Meets or exceed clear opening area of 5.7 sq. ft. or 0.53 m², clear opening width of 20" (508) and clear opening height of 24" (610).

Grille Patterns

	Prairie A	Colonial	Modified Colonial	Tall Fractional	Short Fractional
Gliding		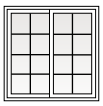			

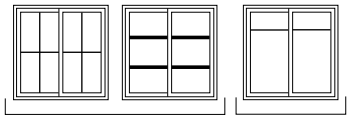

Specified Equal Light Examples Custom Example

Number of lights and overall pattern varies with window size. Patterns shown may not be available for all sizes. Specified equal light and custom patterns are also available. For specified equal light, specify number of same-size rectangles across or down. For more information on divided light, see page 13 or visit **andersenwindows.com/grilles**.

Gliding Window Details – New Construction

Scale 1 1/2" (38) = 1'-0" (305) – 1:8

1 3/8" flange setback

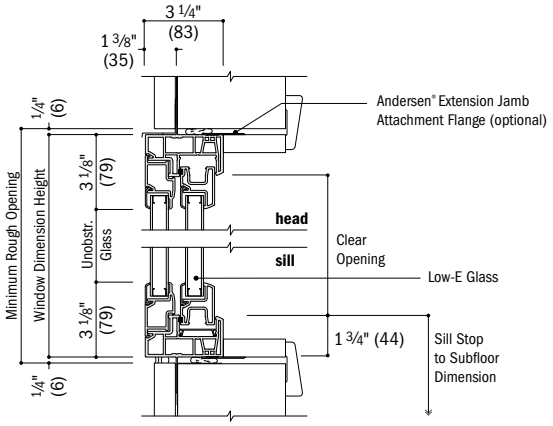

Vertical Section

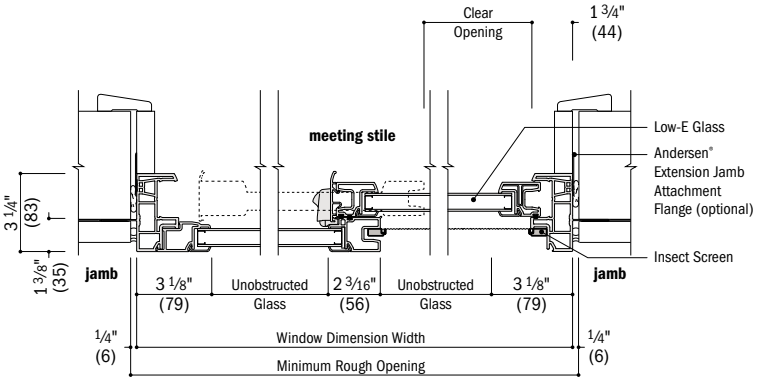

Horizontal Section

1" flange setback with stucco key

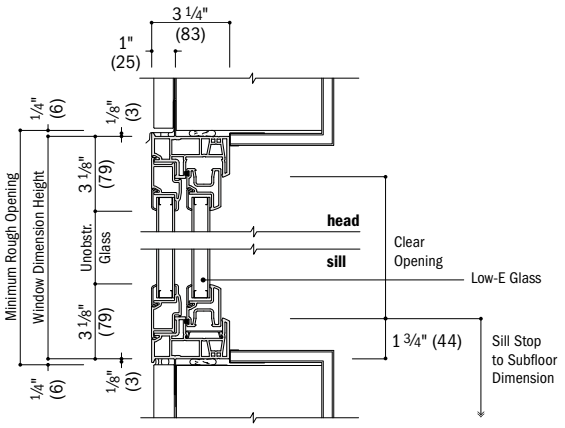

Vertical Section
Stucco Exterior

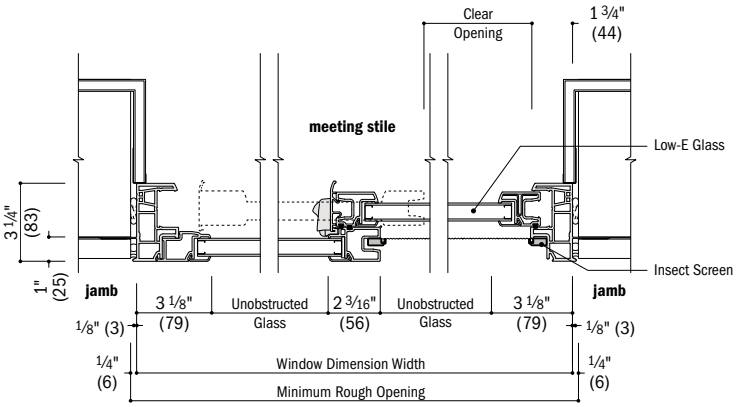

Horizontal Section
Stucco Exterior

integral

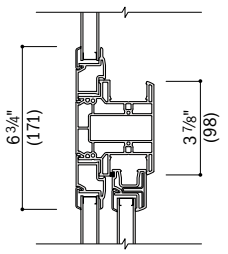

Vertical Section
Picture Over Gliding

See pages 84-87 for joining details.

- Drip cap is required to complete window installation as shown but may not be included with the window. Use of drip cap is recommended for proper installation.
- Light-colored areas are parts included with window. Dark-colored areas are additional Andersen® parts required to complete window assembly as shown.
- **Minimum rough openings may need to be increased to allow for use of building wraps, flashing, sill panning, brackets, fasteners or other items. See installation information on page 110.**
- Details are for illustration only and are not intended to represent product installation methods or materials. Refer to product installation instructions at andersenwindows.com.
- Dimensions in parentheses are in millimeters.

Gliding Window Details – Replacement

Scale 1 1/2" (38) = 1'-0" (305) – 1:8

no flange

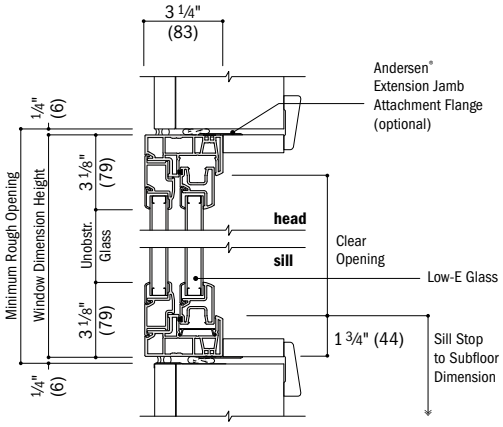

Vertical Section
Existing Framed Opening

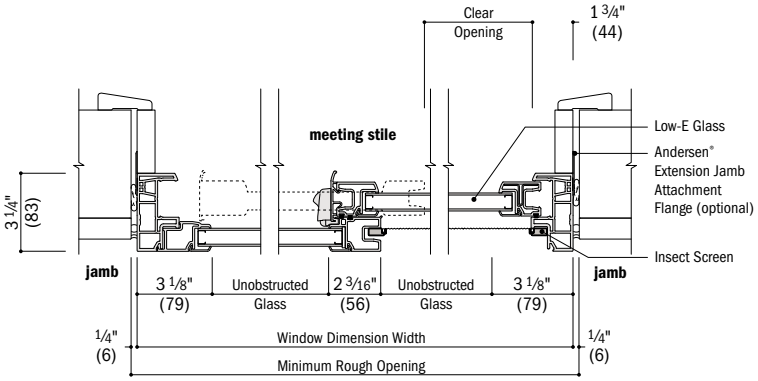

Horizontal Section
Existing Framed Opening

insert

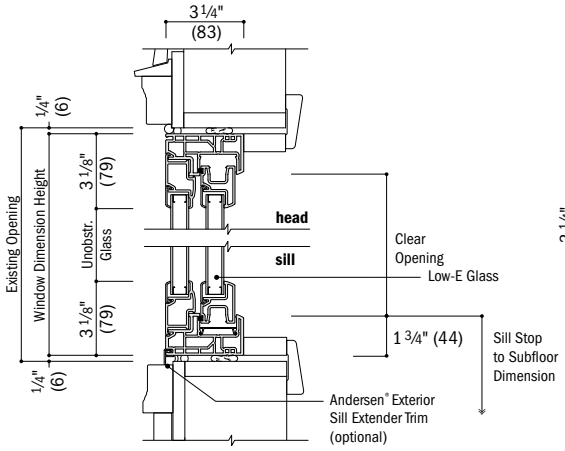

Vertical Section
Existing Window Opening

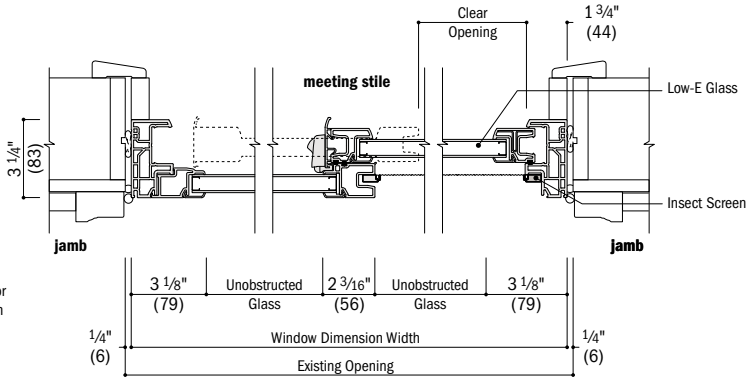

Horizontal Section
Existing Window Opening

integral

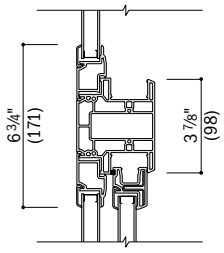

Vertical Section
Picture Over Gliding

Installation accessories for insert frame shown on page 109.

See pages 84-87 for joining details.

- Drip cap is required to complete window installation as shown but may not be included with the window. Use of drip cap is recommended for proper installation.
- Light-colored areas are parts included with window. Dark-colored areas are additional Andersen® parts required to complete window assembly as shown.
- **Minimum rough openings may need to be increased to allow for use of building wraps, flashing, sill panning, brackets, fasteners or other items. See installation information on page 110.**
- Details are for illustration only and are not intended to represent product installation methods or materials. Refer to product installation instructions at andersenwindows.com.
- Dimensions in parentheses are in millimeters.

Table of Picture and Single Transom Window Sizes

Notes on next page also apply to this page.

Scale 1/8" (3) = 1'-0" (305) – 1:96

Window Dimension	11 1/2" (292)	1'-5 1/2" (445)	1'-11 1/2" (597)	2'-5 1/2" (749)	2'-11 1/2" (902)	3'-5 1/2" (1054)	3'-11 1/2" (1207)	4'-5 1/2" (1359)	4'-11 1/2" (1511)	5'-5 1/2" (1664)
Minimum Rough Opening	1'-0" (305)	1'-6" (457)	2'-0" (610)	2'-6" (762)	3'-0" (914)	3'-6" (1067)	4'-0" (1219)	4'-6" (1372)	5'-0" (1524)	5'-6" (1676)
Unobstructed Glass	5 1/4" (133)	11 1/4" (286)	17 1/4" (438)	23 1/4" (591)	29 1/4" (743)	35 1/4" (895)	41 1/4" (1048)	47 1/4" (1200)	53 1/4" (1353)	59 1/4" (1505)

CUSTOM WIDTHS – 11 1/2" to 95 1/2"

CUSTOM HEIGHTS – 11 1/2" to 95 1/2"

11 1/2" (292) 1'-0" (305) 5 1/4" (591)	1010	1610	2010	2610	3010	3610	4010	4610	5010	5610
1'-5 1/2" (445) 1'-6" (457) 11 1/4" (286)	1016	1616	2016	2616	3016	3616	4016	4616	5016	5616
1'-11 1/2" (597) 2'-0" (610) 17 1/4" (438)	1020	1620	2020	2620	3020	3620	4020	4620	5020	5620
2'-5 1/2" (749) 2'-6" (762) 23 1/4" (591)	1026	1626	2026	2626	3026	3626	4026	4626	5026	5626
2'-11 1/2" (902) 3'-0" (914) 29 1/4" (743)	1030	1630	2030	2630	3030	3630	4030	4630	5030	5630
3'-5 1/2" (1054) 3'-6" (1067) 35 1/4" (895)	1036	1636	2036	2636	3036	3636	4036	4636	5036	5636
3'-11 1/2" (1207) 4'-0" (1219) 41 1/4" (1048)	1040	1640	2040	2640	3040	3640	4040	4640	5040	5640
4'-5 1/2" (1359) 4'-6" (1372) 47 1/4" (1200)	1046	1646	2046	2646	3046	3646	4046	4646	5046	5646
4'-11 1/2" (1511) 5'-0" (1524) 53 1/4" (1353)	1050	1650	2050	2650	3050	3650	4050	4650	5050	5650
5'-5 1/2" (1664) 5'-6" (1676) 59 1/4" (1505)	1056	1656	2056	2656	3056	3656	4056	4656	5056	5656
5'-11 1/2" (1816) 6'-0" (1829) 65 1/4" (1657)	1060	1660	2060	2660	3060	3660	4060	4660	5060	5660
6'-5 1/2" (1969) 6'-6" (1981) 71 1/4" (1810)	1066	1666	2066	2666	3066	3666	4066	4666	5066	5666

- "Window Dimension" always refers to outside frame-to-frame dimension.
- "**Minimum Rough Opening**" **dimensions may need to be increased to allow for use of building wraps, flashing, sill panning, brackets, fasteners or other items. See page 110 for more details.**
- Dimensions in parentheses are in millimeters.

Picture and transom sizes on pages 66-71.

5'-11 1/2" (1816)	6'-5 1/2" (1969)	6'-11 1/2" (2121)	7'-5 1/2" (2273)	7'-11 1/2" (2426)
6'-0" (1829)	6'-6" (1981)	7'-0" (2134)	7'-6" (2286)	8'-0" (2438)
65 1/4" (1657)	71 1/4" (1810)	77 1/4" (1962)	83 1/4" (2115)	89 1/4" (2267)

continued on next page

Custom-size windows are available in 1/8" (3) increments. See page 90 for custom sizes and specifications.

Details shown on pages 81-82.

Grille patterns shown on page 77.

- "Window Dimension" always refers to outside frame-to-frame dimension.
- "**Minimum Rough Opening**" **dimensions may need to be increased to allow for use of building wraps, flashing, sill panning, brackets, fasteners or other items. See page 110 for more details.**
- Dimensions in parentheses are in millimeters.

Table of Picture and Single Transom Window Sizes *(continued)*

Notes on next page also apply to this page.

Scale 1/8" (3) = 1'-0" (305) – 1:96

Window Dimension	11 1/2" (292)	1'-5 1/2" (445)	1'-11 1/2" (597)	2'-5 1/2" (749)	2'-11 1/2" (902)	3'-5 1/2" (1054)	3'-11 1/2" (1207)	4'-5 1/2" (1359)	4'-11 1/2" (1511)	5'-5 1/2" (1664)
Minimum Rough Opening	1'-0" (305)	1'-6" (457)	2'-0" (610)	2'-6" (762)	3'-0" (914)	3'-6" (1067)	4'-0" (1219)	4'-6" (1372)	5'-0" (1524)	5'-6" (1676)
Unobstructed Glass	5 1/4" (133)	11 1/4" (286)	17 1/4" (438)	23 1/4" (591)	29 1/4" (743)	35 1/4" (895)	41 1/4" (1048)	47 1/4" (1200)	53 1/4" (1353)	59 1/4" (1505)

CUSTOM WIDTHS – 11 1/2" to **95 1/2"**

CUSTOM HEIGHTS – 11 1/2" to **95 1/2"**

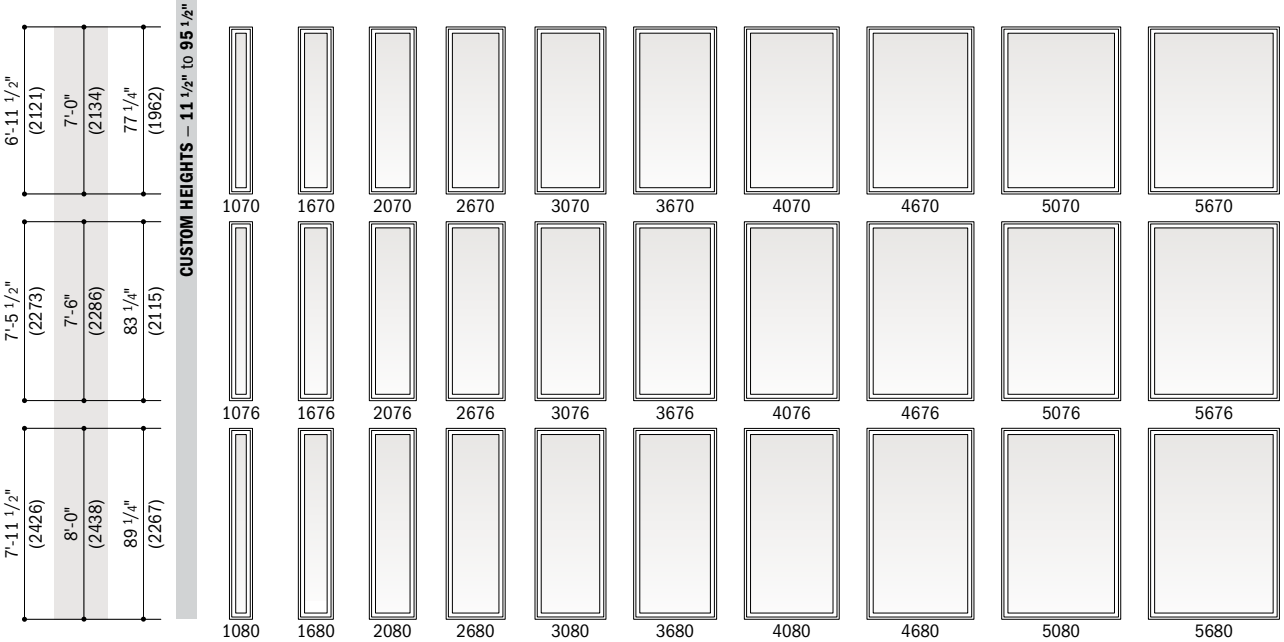

- "Window Dimension" always refers to outside frame-to-frame dimension.
- "**Minimum Rough Opening**" **dimensions may need to be increased to allow for use of building wraps, flashing, sill panning, brackets, fasteners or other items. See page 110 for more details.**
- Dimensions in parentheses are in millimeters.

Picture and Single Transom Window Area Specifications

Window Number	Glass Area Sq. Ft./(m²)	Overall Window Area Sq. Ft./(m²)
1010	0.19 (0.02)	0.92 (0.09)
1016	0.41 (0.04)	1.40 (0.13)
1020	0.63 (0.06)	1.88 (0.17)
1026	0.85 (0.08)	2.36 (0.22)
1030	1.07 (0.10)	2.84 (0.26)
1036	1.29 (0.12)	3.31 (0.31)
1040	1.50 (0.14)	3.79 (0.35)
1046	1.72 (0.16)	4.27 (0.40)
1050	1.94 (0.18)	4.75 (0.44)
1056	2.16 (0.20)	5.23 (0.49)
1060	2.38 (0.22)	5.71 (0.53)
1066	2.60 (0.24)	6.19 (0.57)
1070	2.82 (0.26)	6.67 (0.62)
1076	3.04 (0.28)	7.15 (0.66)
1080	3.25 (0.30)	7.63 (0.71)
1610	0.41 (0.04)	1.40 (0.13)
1616	0.88 (0.08)	2.13 (0.20)
1620	1.35 (0.13)	2.86 (0.27)
1626	1.82 (0.17)	3.59 (0.33)
1630	2.29 (0.21)	4.31 (0.40)
1636	2.75 (0.26)	5.04 (0.47)
1640	3.22 (0.30)	5.77 (0.54)
1646	3.69 (0.34)	6.50 (0.60)

Window Number	Glass Area Sq. Ft./(m²)	Overall Window Area Sq. Ft./(m²)
1650	4.16 (0.39)	7.23 (0.67)
1656	4.63 (0.43)	7.96 (0.74)
1660	5.10 (0.47)	8.69 (0.81)
1666	5.57 (0.52)	9.42 (0.87)
1670	6.04 (0.56)	10.15 (0.94)
1676	6.50 (0.60)	10.88 (1.01)
1680	6.97 (0.65)	11.61 (1.08)
2010	0.63 (0.06)	1.88 (0.17)
2016	1.35 (0.13)	2.86 (0.27)
2020	2.07 (0.19)	3.84 (0.36)
2026	2.79 (0.26)	4.81 (0.45)
2030	3.50 (0.33)	5.79 (0.54)
2036	4.22 (0.39)	6.77 (0.63)
2040	4.94 (0.46)	7.75 (0.72)
2046	5.66 (0.53)	8.73 (0.81)
2050	6.38 (0.59)	9.71 (0.90)
2056	7.10 (0.66)	10.69 (0.99)
2060	7.82 (0.73)	11.67 (1.08)
2066	8.54 (0.79)	12.65 (1.17)
2070	9.25 (0.86)	13.63 (1.27)
2076	9.97 (0.93)	14.61 (1.36)
2080	10.69 (0.99)	15.59 (1.45)
2610	0.85 (0.08)	2.36 (0.22)

Window Number	Glass Area Sq. Ft./(m²)	Overall Window Area Sq. Ft./(m²)
2616	1.82 (0.17)	3.59 (0.33)
2620	2.79 (0.26)	4.81 (0.45)
2626	3.75 (0.35)	6.04 (0.56)
2630	4.72 (0.44)	7.27 (0.68)
2636	5.69 (0.53)	8.50 (0.79)
2640	6.66 (0.62)	9.73 (0.90)
2646	7.63 (0.71)	10.96 (1.02)
2650	8.60 (0.80)	12.19 (1.13)
2656	9.57 (0.89)	13.42 (1.25)
2660	10.54 (0.98)	14.65 (1.36)
2666	11.50 (1.07)	15.88 (1.47)
2670	12.47 (1.16)	17.11 (1.59)
2676	13.44 (1.25)	18.34 (1.70)
2680	14.41 (1.34)	19.56 (1.82)
3010	1.07 (0.10)	2.84 (0.26)
3016	2.29 (0.21)	4.31 (0.40)
3020	3.50 (0.33)	5.79 (0.54)
3026	4.72 (0.44)	7.27 (0.68)
3030	5.94 (0.55)	8.75 (0.81)
3036	7.16 (0.67)	10.23 (0.95)
3040	8.38 (0.78)	11.71 (1.09)

- Dimensions in parentheses are in square meters.

continued on next page

Picture and transom sizes on pages 66-71.

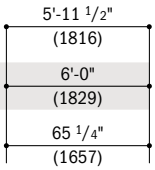

Custom-size windows are available in 1/8" (3) increments. See page 90 for custom sizes and specifications.

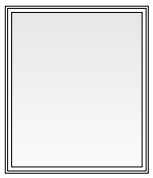
6070

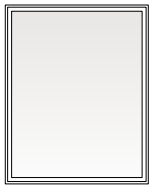
6076

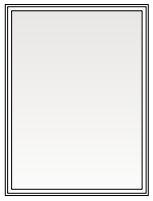
6080

Details shown on pages 81-82. Grille patterns shown on page 77.

- "Window Dimension" always refers to outside frame-to-frame dimension.
- **"Minimum Rough Opening" dimensions may need to be increased to allow for use of building wraps, flashing, sill panning, brackets, fasteners or other items. See page 110 for more details.**
- Dimensions in parentheses are in millimeters.

Picture and Single Transom Window Area Specifications *(continued)*

Window Number	Glass Area Sq. Ft./(m²)		Overall Window Area Sq. Ft./(m²)	
3046	9.60	(0.89)	13.19	(1.23)
3050	10.82	(1.00)	14.67	(1.36)
3056	12.04	(1.12)	16.15	(1.50)
3060	13.25	(1.23)	17.63	(1.64)
3066	14.47	(1.34)	19.11	(1.77)
3070	15.69	(1.46)	20.59	(1.91)
3076	16.91	(1.57)	22.06	(2.05)
3080	18.13	(1.68)	23.54	(2.19)
3610	1.29	(0.12)	3.31	(0.31)
3616	2.75	(0.26)	5.04	(0.47)
3620	4.22	(0.39)	6.77	(0.63)
3626	5.69	(0.53)	8.50	(0.79)
3630	7.16	(0.67)	10.23	(0.95)
3636	8.63	(0.80)	11.96	(1.11)
3640	10.10	(0.94)	13.69	(1.27)
3646	11.57	(1.07)	15.42	(1.43)
3650	13.04	(1.21)	17.15	(1.59)
3656	14.50	(1.35)	18.88	(1.75)
3660	15.97	(1.48)	20.61	(1.91)
3666	17.44	(1.62)	22.34	(2.07)
3670	18.91	(1.76)	24.06	(2.24)
3676	20.38	(1.89)	25.79	(2.40)
3680	21.85	(2.03)	27.52	(2.56)

Window Number	Glass Area Sq. Ft./(m²)		Overall Window Area Sq. Ft./(m²)	
4010	1.50	(0.14)	3.79	(0.35)
4016	3.22	(0.30)	5.77	(0.54)
4020	4.94	(0.46)	7.75	(0.72)
4026	6.66	(0.62)	9.73	(0.90)
4030	8.38	(0.78)	11.71	(1.09)
4036	10.10	(0.94)	13.69	(1.27)
4040	11.82	(1.10)	15.67	(1.46)
4046	13.54	(1.26)	17.65	(1.64)
4050	15.25	(1.42)	19.63	(1.82)
4056	16.97	(1.58)	21.61	(2.01)
4060	18.69	(1.74)	23.59	(2.19)
4066	20.41	(1.90)	25.56	(2.37)
4070	22.13	(2.06)	27.54	(2.56)
4076	23.85	(2.22)	29.52	(2.74)
4080	25.57	(2.38)	31.50	(2.93)
4610	1.72	(0.16)	4.27	(0.40)
4616	3.69	(0.34)	6.50	(0.60)
4620	5.66	(0.53)	8.73	(0.81)
4626	7.63	(0.71)	10.96	(1.02)
4630	9.60	(0.89)	13.19	(1.23)
4636	11.57	(1.07)	15.42	(1.43)
4640	13.54	(1.26)	17.65	(1.64)
4646	15.50	(1.44)	19.88	(1.85)
4650	17.47	(1.62)	22.11	(2.05)
4656	19.44	(1.81)	24.34	(2.26)
4660	21.41	(1.99)	26.56	(2.47)
4666	23.38	(2.17)	28.79	(2.67)
4670	25.35	(2.35)	31.02	(2.88)
4676	27.32	(2.54)	33.25	(3.09)
4680	29.29	(2.72)	35.48	(3.30)
5010	1.94	(0.18)	4.75	(0.44)
5016	4.16	(0.39)	7.23	(0.67)
5020	6.38	(0.59)	9.71	(0.90)
5026	8.60	(0.80)	12.19	(1.13)
5030	10.82	(1.00)	14.67	(1.36)
5036	13.04	(1.21)	17.15	(1.59)
5040	15.25	(1.42)	19.63	(1.82)
5046	17.47	(1.62)	22.11	(2.05)
5050	19.69	(1.83)	24.59	(2.28)
5056	21.91	(2.04)	27.06	(2.51)
5060	24.13	(2.24)	29.54	(2.74)
5066	26.35	(2.45)	32.02	(2.97)
5070	28.57	(2.65)	34.50	(3.21)
5076	30.79	(2.86)	36.98	(3.44)
5080	33.00	(3.07)	39.46	(3.67)
5610	2.16	(0.20)	5.23	(0.49)
5616	4.63	(0.43)	7.96	(0.74)
5620	7.10	(0.66)	10.69	(0.99)
5626	9.57	(0.89)	13.42	(1.25)
5630	12.04	(1.12)	16.15	(1.50)
5636	14.50	(1.35)	18.88	(1.75)
5640	16.97	(1.58)	21.61	(2.01)
5646	19.44	(1.81)	24.34	(2.26)
5650	21.91	(2.04)	27.06	(2.51)
5656	24.38	(2.26)	29.79	(2.77)
5660	26.85	(2.49)	32.52	(3.02)
5666	29.32	(2.72)	35.25	(3.27)
5670	31.79	(2.95)	37.98	(3.53)
5676	34.25	(3.18)	40.71	(3.78)
5680	36.72	(3.41)	43.44	(4.04)

Window Number	Glass Area Sq. Ft./(m²)		Overall Window Area Sq. Ft./(m²)	
6010	2.38	(0.22)	5.71	(0.53)
6016	5.10	(0.47)	8.69	(0.81)
6020	7.82	(0.73)	11.67	(1.08)
6026	10.54	(0.98)	14.65	(1.36)
6030	13.25	(1.23)	17.63	(1.64)
6036	15.97	(1.48)	20.61	(1.91)
6040	18.69	(1.74)	23.59	(2.19)
6046	21.41	(1.99)	26.56	(2.47)
6050	24.13	(2.24)	29.54	(2.74)
6056	26.85	(2.49)	32.52	(3.02)
6060	29.57	(2.75)	35.50	(3.30)
6066	32.29	(3.00)	38.48	(3.57)
6070	35.00	(3.25)	41.46	(3.85)
6076	37.72	(3.50)	44.44	(4.13)
6080	40.44	(3.76)	47.42	(4.41)
6610	2.60	(0.24)	6.19	(0.57)
6616	5.57	(0.52)	9.42	(0.87)
6620	8.54	(0.79)	12.65	(1.17)
6626	11.50	(1.07)	15.88	(1.47)
6630	14.47	(1.34)	19.11	(1.77)
6636	17.44	(1.62)	22.34	(2.07)
6640	20.41	(1.90)	25.56	(2.37)
6646	23.38	(2.17)	28.79	(2.67)
6650	26.35	(2.45)	32.02	(2.97)
6656	29.32	(2.72)	35.25	(3.27)
6660	32.29	(3.00)	38.48	(3.57)
7010	2.82	(0.26)	6.67	(0.62)
7016	6.04	(0.56)	10.15	(0.94)
7020	9.25	(0.86)	13.63	(1.27)
7026	12.47	(1.16)	17.11	(1.59)
7030	15.69	(1.46)	20.59	(1.91)
7036	18.91	(1.76)	24.06	(2.24)
7040	22.13	(2.06)	27.54	(2.56)
7046	25.35	(2.35)	31.02	(2.88)
7050	28.57	(2.65)	34.50	(3.21)
7056	31.79	(2.95)	37.98	(3.53)
7060	35.00	(3.25)	41.46	(3.85)
7610	3.04	(0.28)	7.15	(0.66)
7616	6.50	(0.60)	10.88	(1.01)
7620	9.97	(0.93)	14.61	(1.36)
7626	13.44	(1.25)	18.34	(1.70)
7630	16.91	(1.57)	22.06	(2.05)
7636	20.38	(1.89)	25.79	(2.40)
7640	23.85	(2.22)	29.52	(2.74)
7646	27.32	(2.54)	33.25	(3.09)
7650	30.79	(2.86)	36.98	(3.44)
7656	34.25	(3.18)	40.71	(3.78)
7660	37.72	(3.50)	44.44	(4.13)
8010	3.25	(0.30)	7.63	(0.71)
8016	6.97	(0.65)	11.61	(1.08)
8020	10.69	(0.99)	15.59	(1.45)
8026	14.41	(1.34)	19.56	(1.82)
8030	18.13	(1.68)	23.54	(2.19)
8036	21.85	(2.03)	27.52	(2.56)
8040	25.57	(2.38)	31.50	(2.93)
8046	29.29	(2.72)	35.48	(3.30)
8050	33.00	(3.07)	39.46	(3.67)
8056	36.72	(3.41)	43.44	(4.04)
8060	40.44	(3.76)	47.42	(4.41)

- Dimensions in parentheses are in square meters.

Table of Twin and Triple Transom Window Sizes

Scale 1/8" (3) = 1'-0" (305) – 1:96

Notes on next page also apply to this page.

Window Dimension	2'-11 1/2" (902)	3'-5 1/2" (1054)	3'-11 1/2" (1207)	4'-5 1/2" (1359)	4'-11 1/2" (1511)	5'-5 1/2" (1664)	5'-11 1/2" (1816)	6'-11 1/2" (2121)
Minimum Rough Opening	3'-0" (914)	3'-6" (1067)	4'-0" (1219)	4'-6" (1372)	5'-0" (1524)	5'-6" (1676)	6'-0" (1829)	7'-0" (2134)
Unobstructed Glass (width of twin single sash)	11 1/4" (286)	14 1/4" (362)	17 1/4" (438)	20 1/4" (514)	23 1/4" (591)	26 1/4" (667)	29 1/4" (743)	35 1/4" (895)
Unobstructed Glass (width of triple single sash)				11 1/4" (286)			17 1/4" (438)	

CUSTOM WIDTHS TWIN – 35 1/2" to **95 1/2"** **TRIPLE – 53 1/2"** to **143 1/2"**

CUSTOM HEIGHTS – 11 1/2" to **23 1/2"**

11 1/2" (292) 1'-0" (305) 5 1/4" (133)

1'-5 1/2" (445) 1'-6" (457) 11 1/4" (286)

1'-11 1/2" (597) 2'-0" (610) 17 1/4" (438)

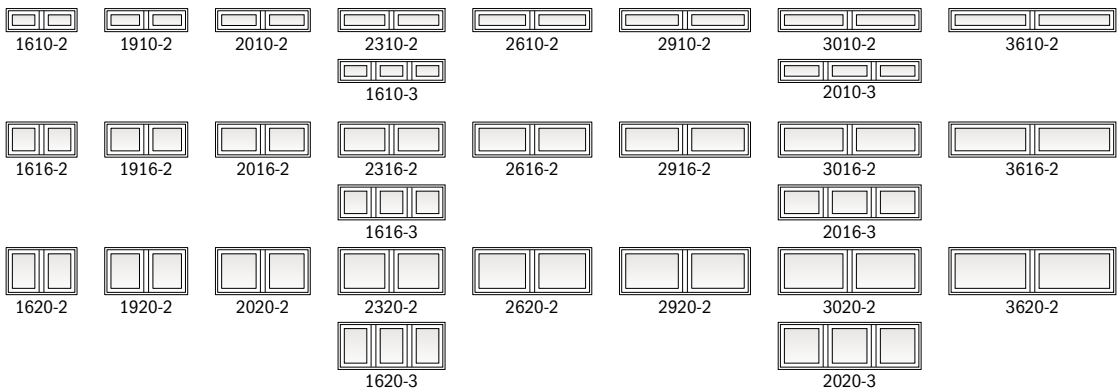

- "Window Dimension" always refers to outside frame-to-frame dimension.
- "**Minimum Rough Opening**" **dimensions may need to be increased to allow for use of building wraps, flashing, sill panning, brackets, fasteners or other items. See page 110 for more details.**
- Dimensions in parentheses are in millimeters.

Twin Transom Window Area Specifications

Window Number	Glass Area Sq. Ft./(m²)	Overall Window Area Sq. Ft./(m²)
1610-2	0.82 (0.08)	2.84 (0.26)
1910-2	1.04 (0.10)	3.31 (0.31)
2010-2	1.26 (0.12)	3.79 (0.35)
2310-2	1.48 (0.14)	4.27 (0.40)
2610-2	1.70 (0.16)	4.75 (0.44)
2910-2	1.91 (0.18)	5.23 (0.49)
3010-2	2.13 (0.20)	5.71 (0.53)
3610-2	2.57 (0.24)	6.67 (0.62)
4010-2	3.01 (0.28)	7.63 (0.71)
1616-2	1.76 (0.16)	4.31 (0.40)
1916-2	2.23 (0.21)	5.04 (0.47)
2016-2	2.70 (0.25)	5.77 (0.54)
2316-2	3.16 (0.29)	6.50 (0.60)
2616-2	3.63 (0.34)	7.23 (0.67)
2916-2	4.10 (0.38)	7.96 (0.74)
3016-2	4.57 (0.42)	8.69 (0.81)
3616-2	5.51 (0.51)	10.15 (0.94)
4016-2	6.45 (0.60)	11.61 (1.08)
1620-2	2.70 (0.25)	5.79 (0.54)
1920-2	3.41 (0.32)	6.77 (0.63)
2020-2	4.13 (0.38)	7.75 (0.72)
2320-2	4.85 (0.45)	8.73 (0.81)
2620-2	5.57 (0.52)	9.71 (0.90)
2920-2	6.29 (0.58)	10.69 (0.99)
3020-2	7.01 (0.65)	11.67 (1.08)
3620-2	8.45 (0.78)	13.63 (1.27)
4020-2	9.88 (0.92)	15.59 (1.45)

- Dimensions in parentheses are in square meters.

Triple Transom Window Area Specifications

Window Number	Glass Area Sq. Ft./(m²)	Overall Window Area Sq. Ft./(m²)
1610-3	1.23 (0.11)	4.27 (0.40)
2010-3	1.89 (0.18)	5.71 (0.53)
2610-3	2.54 (0.24)	7.15 (0.66)
3010-3	3.20 (0.30)	8.59 (0.80)
3610-3	3.86 (0.36)	10.02 (0.93)
4010-3	4.51 (0.42)	11.46 (1.06)
1616-3	2.64 (0.24)	6.50 (0.60)
2016-3	4.04 (0.38)	8.69 (0.81)
2616-3	5.45 (0.51)	10.88 (1.01)
3016-3	6.86 (0.64)	13.06 (1.21)
3616-3	8.26 (0.77)	15.25 (1.42)
4016-3	9.67 (0.90)	17.44 (1.62)
1620-3	4.04 (0.38)	8.73 (0.81)
2020-3	6.20 (0.58)	11.67 (1.08)
2620-3	8.36 (0.78)	14.61 (1.36)
3020-3	10.51 (0.98)	17.54 (1.63)
3620-3	12.67 (1.18)	20.48 (1.90)
4020-3	14.82 (1.38)	23.42 (2.18)

- Dimensions in parentheses are in square meters.

Half Circle Window Area Specifications

Window Number	Glass Area Sq. Ft./(m²)	Overall Window Area Sq. Ft./(m²)
20	0.80 (0.07)	2.02 (0.19)
26	1.46 (0.14)	3.01 (0.28)
30	2.32 (0.22)	4.21 (0.39)
36	3.37 (0.31)	5.60 (0.52)
40	4.62 (0.43)	7.18 (0.67)
46	6.06 (0.56)	8.97 (0.83)
50	7.70 (0.72)	10.95 (1.02)
56	9.54 (0.89)	13.12 (1.22)
60	11.58 (1.08)	15.49 (1.44)
66	13.81 (1.28)	18.06 (1.68)
70	16.23 (1.51)	20.83 (1.93)
76	18.85 (1.75)	23.79 (2.21)
80	21.67 (2.01)	26.94 (2.50)

- Dimensions in parentheses are in square meters.

Circle Window Area Specifications

Window Number	Glass Area Sq. Ft./(m²)	Overall Window Area Sq. Ft./(m²)
2020	1.61 (0.15)	3.01 (0.28)
2626	2.93 (0.27)	4.75 (0.44)
3030	4.65 (0.43)	6.87 (0.64)
3636	6.75 (0.63)	9.39 (0.87)
4040	9.25 (0.86)	12.31 (1.14)

- Dimensions in parentheses are in square meters.

Picture and transom sizes on pages 66-71.

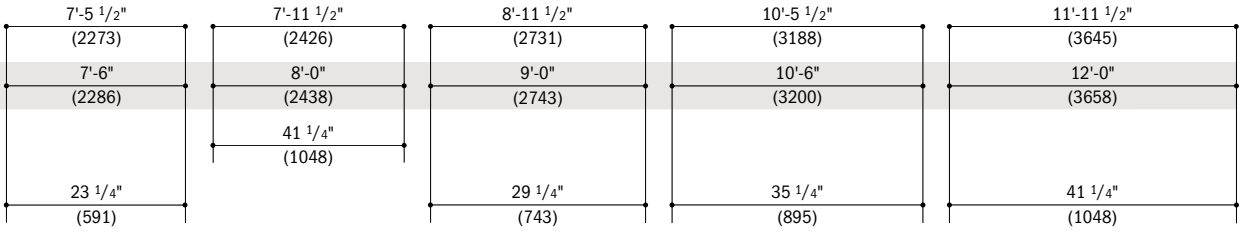

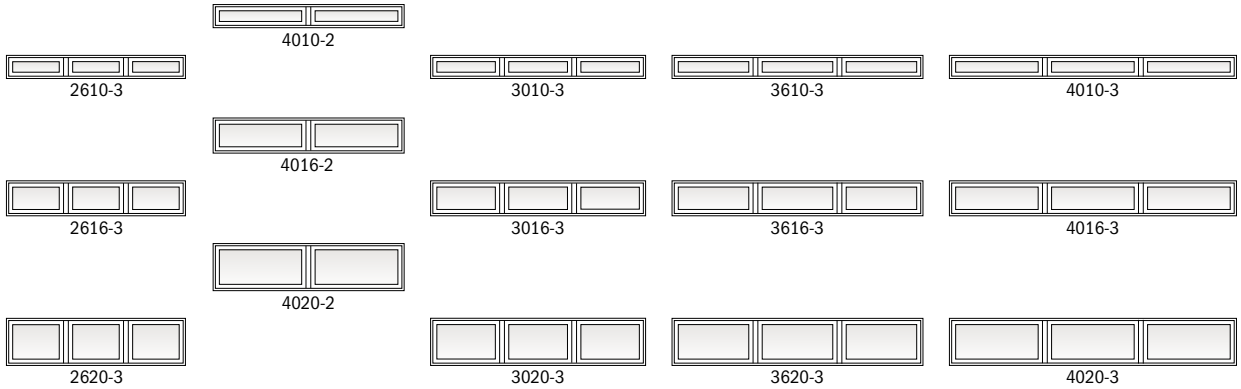

- "Window Dimension" always refers to outside frame-to-frame dimension.
- **"Minimum Rough Opening" dimensions may need to be increased to allow for use of building wraps, flashing, sill panning, brackets, fasteners or other items. See page 110 for more details.**
- Dimensions in parentheses are in millimeters.

Custom-size windows are available in 1/8" (3) increments. See page 90 for custom sizes and specifications.

Windows have one continuous outer frame. Details shown on pages 82-83.

Quarter Circle Window Area Specifications

Window Number	Glass Area Sq. Ft./(m²)		Overall Window Area Sq. Ft./(m²)	
1616	0.69	(0.06)	1.82	(0.17)
2020	1.62	(0.15)	3.22	(0.30)
2626	2.95	(0.27)	5.01	(0.47)
3030	4.67	(0.43)	7.19	(0.67)
3636	6.78	(0.63)	9.77	(0.91)
4040	9.28	(0.86)	12.73	(1.18)
4646	12.18	(1.13)	16.09	(1.50)
5050	15.47	(1.44)	19.85	(1.84)

- Dimensions in parentheses are in square meters.

Springline™ Window Area Specifications

Window Number	Glass Area Sq. Ft./(m²)		Overall Window Area Sq. Ft./(m²)	
2020	3.23	(0.30)	5.34	(0.50)
2026	3.95	(0.37)	6.32	(0.59)
2030	4.67	(0.43)	7.30	(0.68)
2036	5.38	(0.50)	8.28	(0.77)
2040	6.10	(0.57)	9.26	(0.86)
2046	6.81	(0.63)	10.24	(0.95)
2050	7.53	(0.70)	11.22	(1.04)
2620	4.74	(0.44)	7.19	(0.67)
2626	5.71	(0.53)	8.42	(0.78)
2630	6.67	(0.62)	9.65	(0.90)
2636	7.64	(0.71)	10.87	(1.01)
2640	8.61	(0.80)	12.10	(1.12)
2646	9.57	(0.89)	13.33	(1.24)
2650	10.54	(0.98)	14.56	(1.35)
3020	6.45	(0.60)	9.23	(0.86)
3026	7.66	(0.71)	10.71	(0.99)
3030	8.88	(0.82)	12.19	(1.13)
3036	10.10	(0.94)	13.67	(1.27)
3040	11.31	(1.05)	15.15	(1.41)
3046	12.53	(1.16)	16.63	(1.54)
3050	13.74	(1.28)	18.11	(1.68)
3620	8.35	(0.78)	11.47	(1.07)
3626	9.81	(0.91)	13.20	(1.23)
3630	11.28	(1.05)	14.93	(1.39)
3636	12.75	(1.18)	16.66	(1.55)
3640	14.21	(1.32)	18.39	(1.71)
3646	15.68	(1.46)	20.12	(1.87)
3650	17.14	(1.59)	21.84	(2.03)
4020	10.45	(0.97)	13.90	(1.29)
4026	12.16	(1.13)	15.88	(1.48)
4030	13.88	(1.29)	17.86	(1.66)
4036	15.59	(1.45)	19.84	(1.84)
4040	17.31	(1.61)	21.82	(2.03)
4046	19.03	(1.77)	23.80	(2.21)
4050	20.74	(1.93)	25.78	(2.40)
4620	12.74	(1.18)	16.54	(1.54)
4626	14.71	(1.37)	18.77	(1.74)
4630	16.67	(1.55)	20.99	(1.95)
4636	18.64	(1.73)	23.22	(2.16)
4640	20.60	(1.91)	25.45	(2.36)
4646	22.57	(2.10)	27.68	(2.57)
4650	24.54	(2.28)	29.91	(2.78)
5020	15.23	(1.41)	19.36	(1.80)
5026	17.45	(1.62)	21.84	(2.03)
5030	19.66	(1.83)	24.32	(2.26)
5036	21.88	(2.03)	26.80	(2.49)
5040	24.09	(2.24)	29.28	(2.72)
5046	26.31	(2.44)	31.76	(2.95)
5050	28.53	(2.65)	34.24	(3.18)
5620	17.92	(1.66)	22.39	(2.08)
5626	20.38	(1.89)	25.12	(2.33)
5630	22.85	(2.12)	27.85	(2.59)
5636	25.31	(2.35)	30.58	(2.84)
5640	27.78	(2.58)	33.31	(3.09)
5646	30.25	(2.81)	36.03	(3.35)
5650	32.71	(3.04)	38.76	(3.60)
6020	20.80	(1.93)	25.61	(2.38)
6026	23.51	(2.18)	28.59	(2.66)
6030	26.23	(2.44)	31.57	(2.93)
6036	28.95	(2.69)	34.55	(3.21)
6040	31.66	(2.94)	37.53	(3.49)
6046	34.38	(3.19)	40.51	(3.76)
6050	37.10	(3.45)	43.48	(4.04)

- Dimensions in parentheses are in square meters.

Table of Half Circle Window Sizes

Scale 1/8" (3) = 1'-0" (305) – 1:96

Window Dimension	1'-11 1/2" (597)	2'-5 1/2" (749)	2'-11 1/2" (902)
Minimum Rough Opening	2'-0" (610)	2'-6" (762)	3'-0" (914)
Unobstructed Glass	17 1/4" (438)	23 1/4" (591)	29 1/4" (743)
Radius	11 3/4" (298)	14 3/4" (375)	17 3/4" (451)
	1'-2 7/8" (378) / 1'-3 3/8" (391) / 8 5/8" (219)	1'-5 7/8" (454) / 1'-6 3/8" (467) / 11 5/8" (295)	1'-8 7/8" (530) / 1'-9 3/8" (543) / 14 5/8" (371)
	20	26	30
	3'-5 1/2" (1054)	3'-11 1/2" (1207)	4'-5 1/2" (1359)
	3'-6" (1067)	4'-0" (1219)	4'-6" (1372)
	35 1/4" (895)	41 1/4" (1048)	47 1/4" (1200)
	20 3/4" (527)	23 3/4" (603)	26 3/4" (679)
	1'-11 7/8" (606) / 2'-0 3/8" (619) / 17 5/8" (448)	2'-2 7/8" (683) / 2'-3 3/8" (695) / 20 5/8" (524)	2'-5 7/8" (759) / 2'-6 3/8" (772) / 23 5/8" (600)
	36	40	46
	4'-11 1/2" (1511)	5'-5 1/2" (1664)	5'-11 1/2" (1816)	6'-5 1/2" (1969)
	5'-0" (1524)	5'-6" (1676)	6'-0" (1829)	6'-6" (1981)
	53 1/4" (1353)	59 1/4" (1505)	65 1/4" (1657)	71 1/4" (1810)
	29 3/4" (756)	32 3/4" (832)	35 3/4" (908)	38 3/4" (984)
	2'-8 7/8" (835) / 2'-9 3/8" (848) / 26 5/8" (676)	2'-11 7/8" (911) / 3'-0 3/8" (924) / 29 5/8" (752)	3'-2 7/8" (987) / 3'-3 3/8" (1000) / 32 5/8" (829)	3'-5 7/8" (1064) / 3'-6 3/8" (1076) / 35 5/8" (905)
	50	56	60	66
	6'-11 1/2" (2121)	7'-5 1/2" (2273)	7'-11 1/2" (2426)
	7'-0" (2134)	7'-6" (2286)	8'-0" (2438)
	77 1/4" (1962)	83 1/4" (2115)	89 1/4" (2267)
	41 3/4" (1060)	44 3/4" (1137)	47 3/4" (1213)
	3'-8 7/8" (1140) / 3'-9 3/8" (1153) / 38 5/8" (981)	3'-11 7/8" (1216) / 4'-0 3/8" (1229) / 41 5/8" (1057)	4'-2 7/8" (1292) / 4'-3 3/8" (1305) / 44 5/8" (1133)
	70	76	80

Custom-size half circle windows are available in 1/8" (3) increments. Contact your Andersen supplier for more information.

Details shown on pages 81-82.
Grille patterns shown on page 77.

- "Window Dimension" always refers to outside frame-to-frame dimension.
- "**Minimum Rough Opening**" **dimensions may need to be increased to allow for use of building wraps, flashing, sill panning, brackets, fasteners or other items. See page 110 for more details.**
- Dimensions in parentheses are in millimeters.

Table of Quarter Circle Window Sizes

Scale 1/8" (3) = 1'-0" (305) – 1:96

Window Dimension	1'-5 1/2" (445)	1'-11 1/2" (597)	2'-5 1/2" (749)	2'-11 1/2" (902)
Minimum Rough Opening	1'-6" (457)	2'-0" (610)	2'-6" (762)	3'-0" (914)
Unobstructed Glass	5 1/4" (133)	17 1/2" (438)	23 1/4" (591)	29 1/4" (743)
Radius	14 3/8" (365)	20 3/8" (518)	26 3/8" (670)	32 3/8" (822)

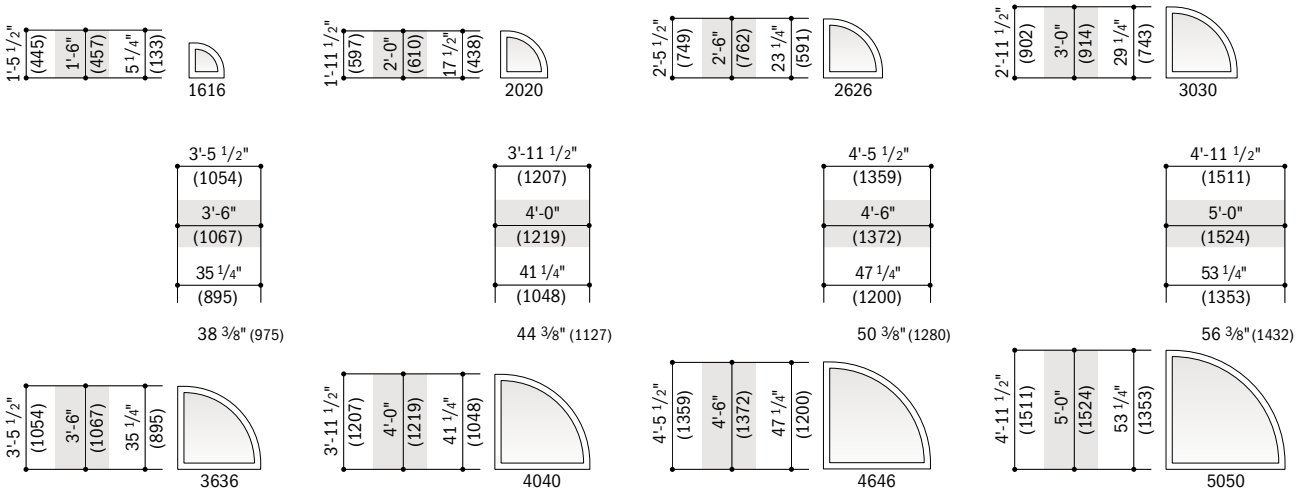

	3'-5 1/2" (1054)	3'-11 1/2" (1207)	4'-5 1/2" (1359)	4'-11 1/2" (1511)
	3'-6" (1067)	4'-0" (1219)	4'-6" (1372)	5'-0" (1524)
	35 1/4" (895)	41 1/4" (1048)	47 1/4" (1200)	53 1/4" (1353)
	38 3/8" (975)	44 3/8" (1127)	50 3/8" (1280)	56 3/8" (1432)

Custom-size quarter circle windows are available in 1/8" (3) increments.

Contact your Andersen supplier for more information.

Details shown on pages 81-82. Grille patterns shown on page 77.

Table of Circle Window Sizes

Scale 1/8" (3) = 1'-0" (305) – 1:96

Window Dimension	1'-11 1/2" (597)	2'-5 1/2" (749)	2'-11 1/2" (902)	3'-5 1/2" (1054)	3'-11 1/2" (1207)
Minimum Rough Opening	2'-0" (610)	2'-6" (762)	3'-0" (914)	3'-6" (1067)	4'-0" (1219)
Unobstructed Glass	17 1/4" (438)	23 1/4" (591)	29 1/4" (743)	35 1/4" (895)	41 1/4" (1048)

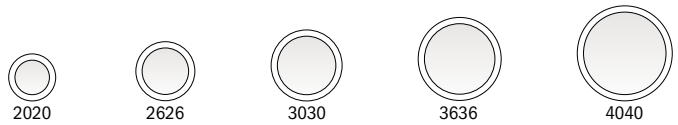

Custom-size circle windows are available in 1/8" (3) increments. Contact your Andersen supplier for more information.

Details shown on pages 81-82.
Grille patterns shown on page 77.

- "Window Dimension" always refers to outside frame-to-frame dimension.
- "**Minimum Rough Opening**" **dimensions may need to be increased to allow for use of building wraps, flashing, sill panning, brackets, fasteners or other items. See page 110 for more details.**
- Dimensions in parentheses are in millimeters.

PICTURE, TRANSOM & SPECIALTY WINDOWS

These custom shapes are available in 1/8" (3) increments.

Design Criteria
Listed for each custom shape are factors that must be considered when deciding on a custom-shaped specialty window.

Details shown on pages 81-82. Grilles are available for most shapes and sizes in colonial and specified equal divided light patterns. For more information on divided light, see page 13 or contact your Andersen supplier.

Custom Unequal Leg Arch

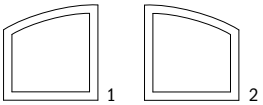

Choose left facing (1) or right facing (2) as viewed from the exterior. Contains unequal legs, two right angles at the sill and an arch at the top.

Custom-size design limitations:

Min./Max. Window Width
17 1/2" (445) to 95 1/2" (2426)

Min./Max. Window Height
11 3/8" (289) to 95 1/2" (2426)

Min./Max. Short Side Height
9 3/4" (248) to 93 7/8" (2384)

Max. Frame Area: 40 sq. ft. or 3.7 m²
Based on the smallest square or rectangular shape that covers the entire window.

Additional limitations may apply. Contact your Andersen supplier for more information.

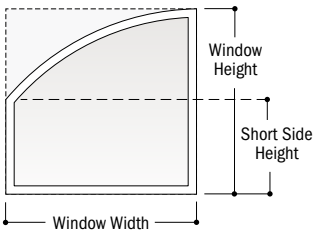

Custom Trapezoid

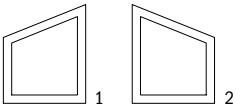

Choose left facing (1) or right facing (2) as viewed from the exterior. Contains a slope to the left or right. Slope is often designed to match a roof's pitch.

Custom-size design limitations:

Min./Max. Window Width
17 1/2" (445) to 107 1/2" (2731)

Min./Max. Window Height
9 7/8" (251) to 95 1/2" (2426)

Min./Max. Short Side Height
9 3/4" (248) to 95 3/8" (2423)

Max. Frame Area: 40 sq. ft. or 3.7 m²
Based on the smallest square or rectangular shape that covers the entire window.

Additional limitations may apply. Contact your Andersen supplier for more information.

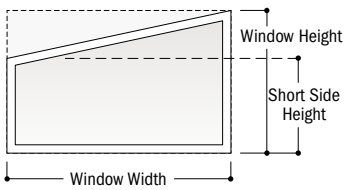

Custom Peak Pentagon

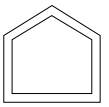

Contains sides of equal length, extending at right angles from the sill and two angled sides of equal length that peak above the center of the sill.

Custom-size design limitations:

Min./Max. Window Width
17 1/2" (445) to 107 1/2" (2731)

Min./Max. Window Height
14 1/8" (359) to 107 1/2" (2731)

Min./Max. Side Height
9 3/4" (248) to 94 1/8" (2391)

Max. Frame Area: 40 sq. ft. or 3.7 m²
Based on the smallest square or rectangular shape that covers the entire window.

Additional limitations may apply. Contact your Andersen supplier for more information.

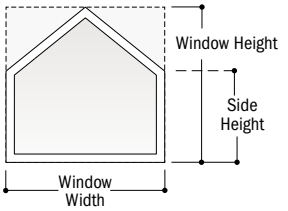

• Dimensions in parentheses are in millimeters.

Custom Angled Pentagon

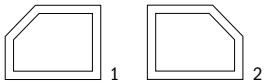

Choose left facing (1) or right facing (2) as viewed from the exterior. Contains an angle cut, or a "clipped corner," sloping to the left or right.

Custom-size design limitations:

Min./Max. Window Width
17 1/2" (445) to 107 1/2" (2731)

Min./Max. Top Width
9 3/4" (248) to 107 3/8" (2727)

Min./Max. Window Height
14 3/8" (365) to 107 1/2" (2731)

Min./Max. Short Side Height
9 3/4" (248) to 94 1/8" (226)

Max. Frame Area: 40 sq. ft. or 3.7 m²
Based on the smallest square or rectangular shape that covers the entire window.

Additional limitations may apply. Contact your Andersen supplier for more information.

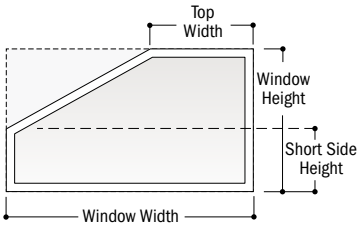

Custom Octagon

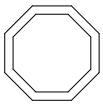

Contains eight equal angles and sides.

Custom-size design limitations:

Min./Max. Window Width
23 1/2" (597) to 71 1/2" (1816)

Min./Max. Window Height
23 1/2" (597) to 71 1/2" (1816)

Additional limitations may apply. Contact your Andersen supplier for more information.

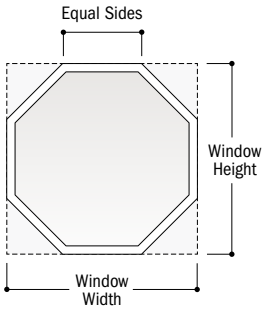

Custom Right Triangle

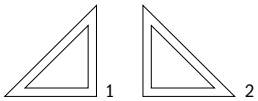

Choose left facing (1) or right facing (2) as viewed from the exterior. Contains one 90-degree angle.

Custom-size design limitations:

Min./Max. Window Width
17 1/2" (445) to 95 1/2" (2426)

Min./Max. Window Height
17 1/2" (445) to 95 1/2" (2426)

Max. Frame Area: 40 sq. ft. or 3.7 m²
Based on the smallest square or rectangular shape that covers the entire window.

Additional limitations may apply. Contact your Andersen supplier for more information.

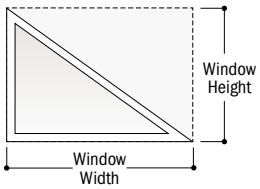

Custom Isosceles Triangle

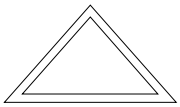

Contains two sides of equal length and two equal angles.

Custom-size design limitations:

Min./Max. Window Width
17 1/2" (445) to 107 1/2" (2731)

Min./Max. Window Height
17 1/2" (445) to 75 7/8" (1927)

Max. Frame Area: 40 sq. ft. or 3.7 m²
Based on the smallest square or rectangular shape that covers the entire window.

Additional limitations may apply. Contact your Andersen supplier for more information.

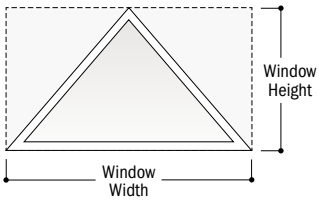

• Dimensions in parentheses are in millimeters.

Table of Springline™ Window Sizes

Scale 1/8" (3) = 1'-0" (305) – 1:96

Notes on next page also apply to this page.

Window Width Dimension	1'-11 1/2" (597)	2'-5 1/2" (749)	2'-11 1/2" (902)	3'-5 1/2" (1054)	3'-11 1/2" (1207)	4'-5 1/2" (1359)	4'-11 1/2" (1511)
Minimum Rough Opening	2'-0" (610)	2'-6" (762)	3'-0" (914)	3'-6" (1067)	4'-0" (1219)	4'-6" (1372)	5'-0" (1524)
Unobstructed Glass	17 1/4" (438)	23 1/4" (591)	29 1/4" (743)	35 1/4" (895)	41 1/4" (1048)	47 1/4" (1200)	53 1/4" (1353)

Window Height Shown in Table

CUSTOM SIZES AVAILABLE

Radius	11 3/4" (298)	14 3/4" (375)	17 3/4" (451)	20 3/4" (527)	23 3/4" (603)	26 3/4" (679)	29 3/4" (756)
Chord Height	11 3/4" (298)	14 3/4" (375)	17 3/4" (451)	20 3/4" (527)	23 3/4" (603)	26 3/4" (679)	29 3/4" (756)

Minimum Rough Opening = Window Height + 1/2" (13)

Unobstructed Glass = Window Height – 6.25" (159)

CUSTOM SIZES AVAILABLE

Side Height

Side Height	11 3/4" (298)	14 3/4" (375)	17 3/4" (451)	20 3/4" (527)	23 3/4" (603)	26 3/4" (679)	29 3/4" (756)
1'-11 1/2" (597)	2'-11 1/4" (895) 2020	3'-2 1/4" (972) 2620	3'-5 1/4" (1048) 3020	3'-8 1/4" (1124) 3620	3'-11 1/4" (1200) 4020	4'-2 1/4" (1276) 4620	4'-5 1/4" (1353) 5020
2'-5 1/2" (749)	3'-5 1/4" (1048) 2026	3'-8 1/4" (1124) 2626	3'-11 1/4" (1200) 3026	4'-2 1/4" (1276) 3626	4'-5 1/4" (1353) 4026	4'-8 1/4" (1429) 4626	4'-11 1/4" (1505) 5026
2'-11 1/2" (902)	3'-11 1/4" (1200) 2030	4'-2 1/4" (1276) 2630	4'-5 1/4" (1353) 3030	4'-8 1/4" (1429) 3630	4'-11 1/4" (1505) 4030	5'-2 1/4" (1581) 4630	5'-5 1/4" (1657) 5030
3'-5 1/2" (1054)	4'-5 1/4" (1353) 2036	4'-8 1/4" (1429) 2636	4'-11 1/4" (1505) 3036	5'-2 1/4" (1581) 3636	5'-5 1/4" (1657) 4036	5'-8 1/4" (1734) 4636	5'-11 1/4" (1810) 5036
3'-11 1/2" (1207)	4'-11 1/4" (1505) 2040	5'-2 1/4" (1581) 2640	5'-5 1/4" (1657) 3040	5'-8 1/4" (1734) 3640	5'-11 1/4" (1810) 4040	6'-2 1/4" (1886) 4640	6'-5 1/4" (1962) 5040
4'-5 1/2" (1359)	5'-5 1/4" (1657) 2046	5'-8 1/4" (1734) 2646	5'-11 1/4" (1810) 3046	6'-2 1/4" (1886) 3646	6'-5 1/4" (1962) 4046	6'-8 1/4" (2038) 4646	6'-11 1/4" (2115) 5046
4'-11 1/2" (1511)	5'-11 1/4" (1810) 2050	6'-2 1/4" (1886) 2650	6'-5 1/4" (1962) 3050	6'-8 1/4" (2038) 3650	6'-11 1/4" (2115) 4050	7'-2 1/4" (2191) 4650	7'-5 1/4" (2267) 5050

- "Window Dimension" always refers to outside frame-to-frame dimension.
- "**Minimum Rough Opening**" **dimensions may need to be increased to allow for use of building wraps, flashing, sill panning, brackets, fasteners or other items. See page 110 for more details.**
- Dimensions in parentheses are in millimeters.

5'-5 1/2" (1664)	5'-11 1/2" (1816)
5'-6" (1676)	6'-0" (1829)
59 1/4" (1505)	65 1/4" (1657)

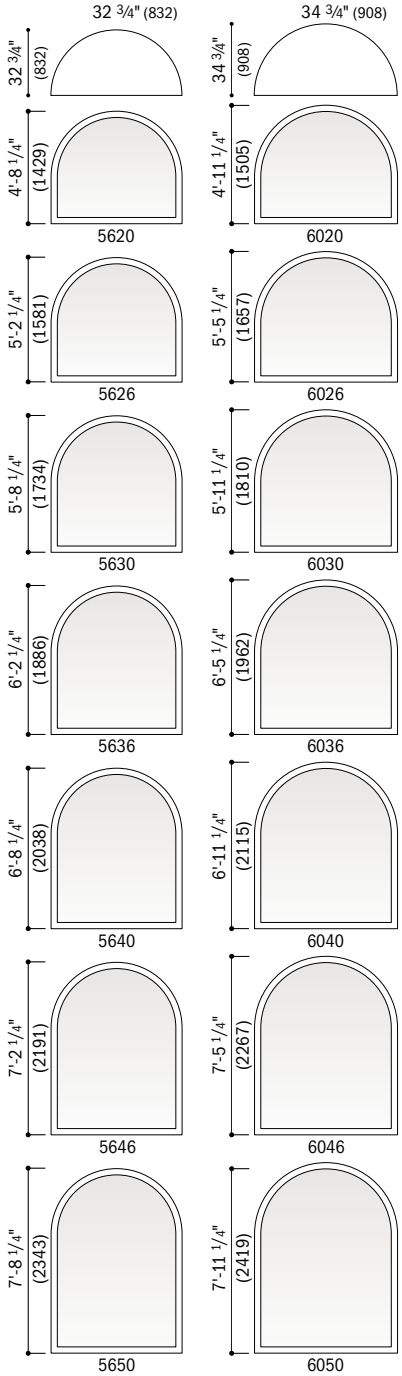

• "Window Dimension" always refers to outside frame-to-frame dimension.
• **"Minimum Rough Opening" dimensions may need to be increased to allow for use of building wraps, flashing, sill panning, brackets, fasteners or other items. See page 110 for more details.**
• Dimensions in parentheses are in millimeters.

Custom-size windows are available in 1/8" (3) increments. Contact your Andersen supplier for more information.

For Springline™ and arch windows, the size designation does not reflect overall window height. (e.g., a 2020 Springline window size has a side height of 1'-11 1/2" and an overall window height of 2'-11 1/4".)

Details shown on pages 81-82.
Grille patterns shown below.

Grille Patterns

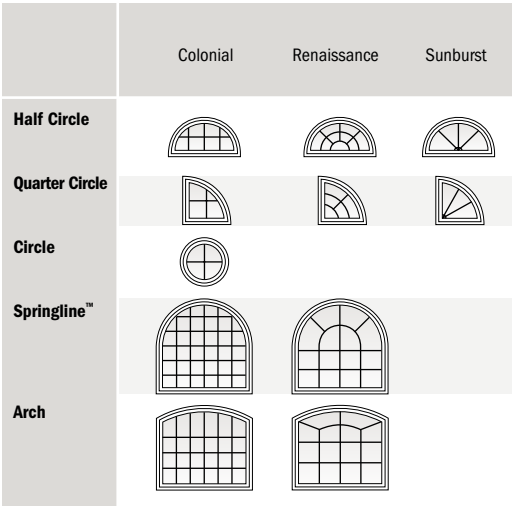

Number of lights and overall pattern varies with window size. Patterns are not available in all configurations. Specialty window patterns may not align with picture window patterns when joined. Specified equal light pattern is available for all shapes except quarter circle. For specified equal light, specify number of same-size rectangles across or down. Custom grille patterns are available for picture and transom windows. For more information on divided light, see page 13 or visit **andersenwindows.com/grilles**.

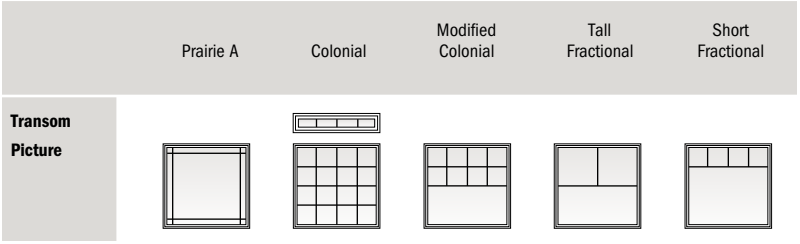

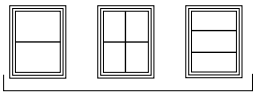

Specified Equal Light Examples

Table of Arch Window Sizes

Scale 1/8" (3) = 1'-0" (305) – 1:96

Notes on page 77 also apply to this pages.

Window Width Dimension	1'-11 1/2" (597)	2'-5 1/2" (749)	2'-11 1/2" (902)	3'-5 1/2" (1054)	3'-11 1/2" (1207)	4'-5 1/2" (1359)	4'-11 1/2" (1511)
Minimum Rough Opening	2'-0" (610)	2'-6" (762)	3'-0" (914)	3'-6" (1067)	4'-0" (1219)	4'-6" (1372)	5'-0" (1524)
Unobstructed Glass	17 1/4" (438)	23 1/4" (591)	29 1/4" (743)	35 1/4" (895)	41 1/4" (1048)	47 1/4" (1200)	53 1/4" (1353)

CUSTOM SIZES AVAILABLE

Window Height Shown in Table

Minimum Rough Opening = Window Height + 1/2" (13)

Unobstructed Glass = Window Height – 6.25" (159)

CUSTOM SIZES AVAILABLE

Radius	23 1/2" (597)	29 1/2" (749)	35 1/2" (902)	41 1/2" (1054)	47 1/2" (1207)	53 1/2" (1359)	59 1/2" (1511)
Chord Height	3 5/32" (80)	3 15/16" (100)	4 3/4" (121)	5 9/16" (141)	6 3/8" (162)	7 5/32" (182)	7 31/32" (202)
Side Height 11 1/2" (292)	1'-2 21/32" (372) 2010	1'-3 7/16" (392) 2610	1'-4 1/4" (413) 3010	1'-5 1/16" (433) 3610	1'-5 7/8" (454) 4010	1'-6 21/32" (474) 4610	1'-7 15/32" (495) 5010
1'-5 1/2" (445)	1'-8 21/32" (524) 2016	1'-9 7/16" (545) 2616	1'-10 1/4" (565) 3016	1'-11 1/16" (586) 3616	1'-11 7/8" (606) 4016	2'-0 21/32" (627) 4616	2'-1 15/32" (647) 5016
1'-11 1/2" (597)	2'-2 21/32" (677) 2020	2'-3 7/16" (697) 2620	2'-4 1/4" (718) 3020	2'-5 1/16" (738) 3620	2'-5 7/8" (759) 4020	2'-6 21/32" (779) 4620	2'-7 15/32" (799) 5020
2'-5 1/2" (749)	2'-8 21/32" (829) 2026	2'-9 7/16" (850) 2626	2'-10 1/4" (870) 3026	2'-11 1/16" (891) 3626	2'-11 7/8" (911) 4026	3'-0 21/32" (931) 4626	3'-1 15/32" (952) 5026
2'-11 1/2" (902)	3'-2 21/32" (982) 2030	3'-3 7/16" (1002) 2630	3'-4 1/4" (1023) 3030	3'-5 1/16" (1043) 3630	3'-5 7/8" (1063) 4030	3'-6 21/32" (1084) 4630	3'-7 15/32" (1104) 5030
3'-5 1/2" (1054)	3'-8 21/32" (1134) 2036	3'-9 7/16" (1154) 2636	3'-10 1/4" (1175) 3036	3'-11 1/16" (1195) 3636	3'-11 7/8" (1216) 4036	4'-0 21/32" (1236) 4636	4'-1 15/32" (1257) 5036
3'-11 1/2" (1207)	4'-2 21/32" (1286) 2040	4'-3 7/16" (1307) 2640	4'-4 1/4" (1327) 3040	4'-5 1/16" (1348) 3640	4'-5 7/8" (1368) 4040	4'-6 21/32" (1389) 4640	4'-7 15/32" (1409) 5040
4'-5 1/2" (1359)	4'-8 21/32" (1439) 2046	4'-9 7/16" (1459) 2646	4'-10 1/4" (1480) 3046	4'-11 1/16" (1500) 3646	4'-11 7/8" (1521) 4046	5'-0 21/32" (1541) 4646	5'-1 15/32" (1561) 5046
4'-11 1/2" (1511)	5'-2 21/32" (1591) 2050	5'-3 7/16" (1612) 2650	5'-4 1/4" (1632) 3050	5'-5 1/16" (1653) 3650	5'-5 7/8" (1673) 4050	5'-6 21/32" (1693) 4650	5'-7 15/32" (1714) 5050
5'-5 1/2" (1664)	5'-8 21/32" (1744) 2056	5'-9 7/16" (1764) 2656	5'-10 1/4" (1785) 3056	5'-11 1/16" (1805) 3656	5'-11 7/8" (1825) 4056	6'-0 21/32" (1846) 4656	6'-1 15/32" (1866) 5056
5'-11 1/2" (1816)	6'-2 21/32" (1896) 2060	6'-3 7/16" (1916) 2660	6'-4 1/4" (1937) 3060	6'-5 1/16" (1957) 3660	6'-5 7/8" (1978) 4060	6'-6 21/32" (1998) 4660	6'-7 15/32" (2019) 5060

Notes on page 77 also apply to this pages.

5'-5 1/2" (1664)	5'-11 1/2" (1816)	6'-5 1/2" (1969)	6'-11 1/2" (2121)	7'-5 1/2" (2273)	7'-11 1/2" (2426)
5'-6" (1676)	6'-0" (1829)	6'-6" (1981)	7'-0" (2134)	7'-6" (2286)	8'-0" (2438)
59 1/4" (1505)	65 1/4" (1657)	71 1/4" (1810)	77 1/4" (1962)	83 1/4" (2115)	89 1/4" (2267)

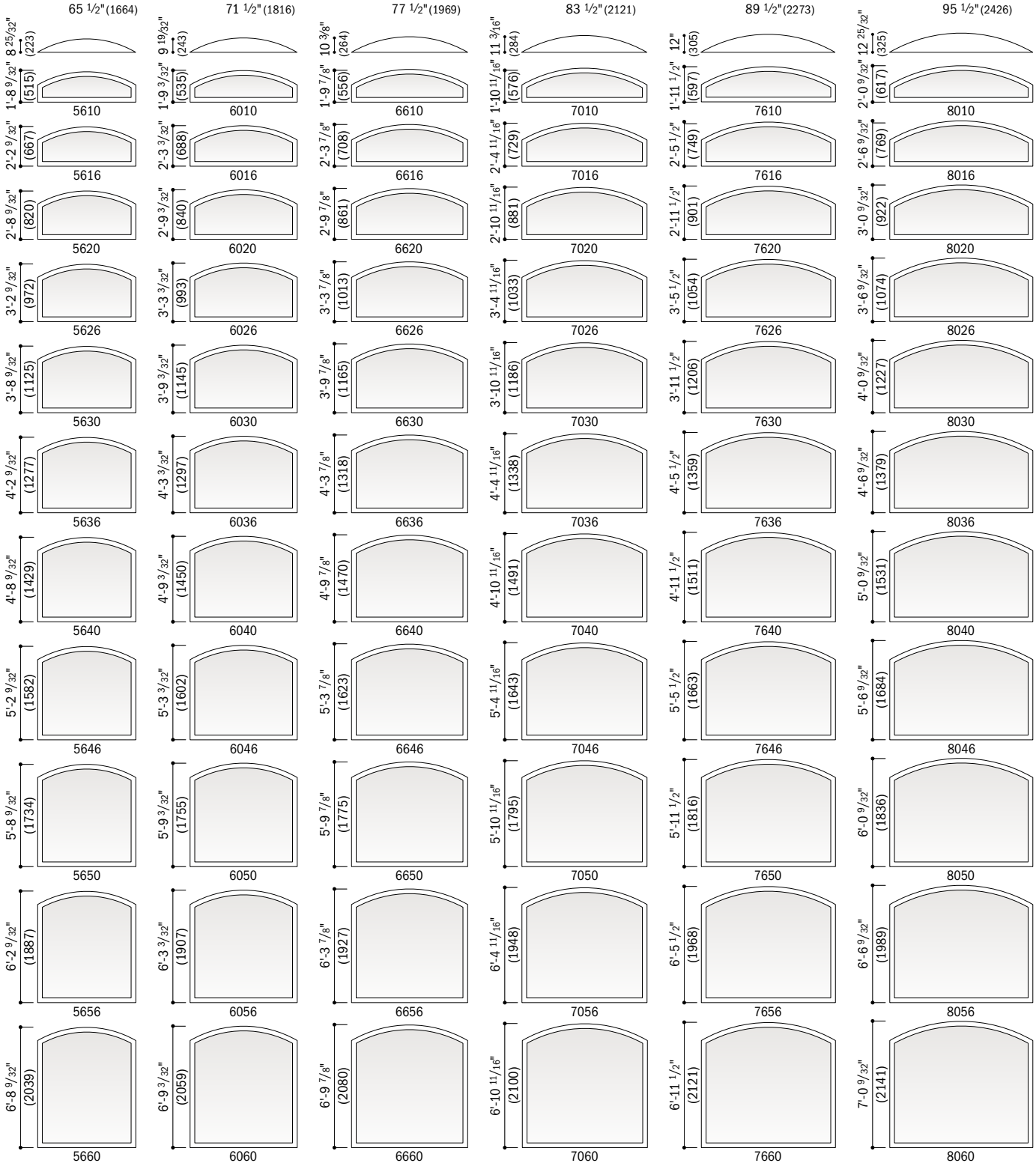

Arch Window Area Specifications

Window Number	Glass Area Sq. Ft./(m²)		Overall Window Area Sq. Ft./(m²)	
2010	0.93	(0.09)	2.22	(0.21)
2016	1.65	(0.15)	3.20	(0.30)
2020	2.37	(0.22)	4.18	(0.39)
2026	3.09	(0.29)	5.16	(0.48)
2030	3.81	(0.35)	6.14	(0.57)
2036	4.52	(0.42)	7.12	(0.66)
2040	5.24	(0.49)	8.10	(0.75)
2046	5.96	(0.55)	9.08	(0.84)
2050	6.68	(0.62)	10.06	(0.93)
2056	7.40	(0.69)	11.04	(1.03)
2060	8.12	(0.75)	12.02	(1.12)
2610	1.34	(0.12)	2.90	(0.27)
2616	2.31	(0.21)	4.13	(0.38)
2620	3.28	(0.30)	5.36	(0.50)
2626	4.25	(0.39)	6.59	(0.61)
2630	5.22	(0.48)	7.82	(0.73)
2636	6.19	(0.57)	9.05	(0.84)
2640	7.16	(0.66)	10.28	(0.95)
2646	8.12	(0.75)	11.51	(1.07)
2650	9.09	(0.84)	12.74	(1.18)
2656	10.06	(0.93)	13.97	(1.30)
2660	11.03	(1.02)	15.20	(1.41)
3010	1.80	(0.17)	3.63	(0.34)
3016	3.02	(0.28)	5.11	(0.47)
3020	4.24	(0.39)	6.59	(0.61)
3026	5.46	(0.51)	8.07	(0.75)
3030	6.68	(0.62)	9.54	(0.89)
3036	7.90	(0.73)	11.02	(1.02)
3040	9.11	(0.85)	12.50	(1.16)
3046	10.33	(0.96)	13.98	(1.30)
3050	11.55	(1.07)	15.46	(1.44)
3056	12.77	(1.19)	16.94	(1.57)
3060	13.99	(1.30)	18.42	(1.71)
3610	2.30	(0.21)	4.40	(0.41)
3616	3.77	(0.35)	6.13	(0.57)
3620	5.24	(0.49)	7.86	(0.73)
3626	6.71	(0.62)	9.59	(0.89)
3630	8.18	(0.76)	11.31	(1.05)
3636	9.65	(0.90)	13.04	(1.21)
3640	11.12	(1.03)	14.77	(1.37)
3646	12.59	(1.17)	16.50	(1.53)
3650	14.05	(1.31)	18.23	(1.69)
3656	15.52	(1.44)	19.96	(1.85)
3660	16.99	(1.58)	21.69	(2.02)
4010	2.85	(0.27)	5.21	(0.48)
4016	4.57	(0.42)	7.19	(0.67)
4020	6.29	(0.58)	9.17	(0.85)
4026	8.01	(0.74)	11.15	(1.04)
4030	9.73	(0.90)	13.13	(1.22)
4036	11.45	(1.06)	15.11	(1.40)
4040	13.17	(1.22)	17.09	(1.59)
4046	14.88	(1.38)	19.07	(1.77)
4050	16.60	(1.54)	21.05	(1.96)
4056	18.32	(1.70)	23.03	(2.14)
4060	20.04	(1.86)	25.00	(2.32)
4610	3.45	(0.32)	6.07	(0.56)
4616	5.42	(0.50)	8.30	(0.77)
4620	7.38	(0.69)	10.53	(0.98)
4626	9.35	(0.87)	12.76	(1.19)
4630	11.32	(1.05)	14.99	(1.39)
4636	13.29	(1.23)	17.22	(1.60)

Window Number	Glass Area Sq. Ft./(m²)		Overall Window Area Sq. Ft./(m²)	
4640	15.26	(1.42)	19.45	(1.81)
4646	17.23	(1.60)	21.68	(2.01)
4650	19.20	(1.78)	23.91	(2.22)
4656	21.17	(1.97)	26.14	(2.43)
4660	23.13	(2.15)	28.36	(2.64)
5010	4.09	(0.38)	6.98	(0.65)
5016	6.30	(0.59)	9.46	(0.88)
5020	8.52	(0.79)	11.94	(1.11)
5026	10.74	(1.00)	14.42	(1.34)
5030	12.96	(1.20)	16.90	(1.57)
5036	15.18	(1.41)	19.37	(1.80)
5040	17.40	(1.62)	21.85	(2.03)
5046	19.62	(1.82)	24.33	(2.26)
5050	21.84	(2.03)	26.81	(2.49)
5056	24.05	(2.23)	29.29	(2.72)
5060	26.27	(2.44)	31.77	(2.95)
5610	4.77	(0.44)	7.93	(0.74)
5616	7.24	(0.67)	10.66	(0.99)
5620	9.71	(0.90)	13.39	(1.24)
5626	12.18	(1.13)	16.12	(1.50)
5630	14.65	(1.36)	18.85	(1.75)
5636	17.11	(1.59)	21.58	(2.00)
5640	19.58	(1.82)	24.30	(2.26)
5646	22.05	(2.05)	27.03	(2.51)
5650	24.52	(2.28)	29.76	(2.77)
5656	26.99	(2.51)	32.49	(3.02)
5660	29.46	(2.74)	35.22	(3.27)
6010	5.50	(0.51)	8.93	(0.83)
6016	8.22	(0.76)	11.91	(1.11)
6020	10.94	(1.02)	14.88	(1.38)
6026	13.66	(1.27)	17.86	(1.66)
6030	16.38	(1.52)	20.84	(1.94)
6036	19.09	(1.77)	23.82	(2.21)
6040	21.81	(2.03)	26.80	(2.49)
6046	24.53	(2.28)	29.78	(2.77)
6050	27.25	(2.53)	32.76	(3.04)
6056	29.97	(2.78)	35.74	(3.32)
6060	32.69	(3.04)	38.72	(3.60)
6610	6.27	(0.58)	9.97	(0.93)
6616	9.24	(0.86)	13.20	(1.23)
6620	12.21	(1.13)	16.43	(1.53)
6626	15.18	(1.41)	19.66	(1.83)
6630	18.15	(1.69)	22.88	(2.13)
6636	21.12	(1.96)	26.11	(2.43)
6640	24.09	(2.24)	29.34	(2.73)
6646	27.06	(2.51)	32.57	(3.03)
6650	30.02	(2.79)	35.80	(3.33)
6656	32.99	(3.07)	39.03	(3.63)
6660	35.96	(3.34)	42.26	(3.93)
7010	7.10	(0.66)	11.05	(1.03)
7016	10.31	(0.96)	14.53	(1.35)
7020	13.53	(1.26)	18.01	(1.67)
7026	16.75	(1.56)	21.49	(2.00)
7030	19.97	(1.86)	24.97	(2.32)
7036	23.19	(2.15)	28.45	(2.64)
7040	26.41	(2.45)	31.93	(2.97)
7046	29.63	(2.75)	35.41	(3.29)
7050	32.85	(3.05)	38.89	(3.61)
7056	36.06	(3.35)	42.37	(3.94)
7060	39.28	(3.65)	45.85	(4.26)
7610	7.96	(0.74)	12.19	(1.13)

Window Number	Glass Area Sq. Ft./(m²)		Overall Window Area Sq. Ft./(m²)	
7616	11.43	(1.06)	15.92	(1.48)
7620	14.90	(1.38)	19.64	(1.83)
7626	18.37	(1.71)	23.37	(2.17)
7630	21.84	(2.03)	27.10	(2.52)
7636	25.30	(2.35)	30.83	(2.86)
7640	28.77	(2.67)	34.56	(3.21)
7646	32.24	(3.00)	38.29	(3.56)
7650	35.71	(3.32)	42.02	(3.90)
7656	39.18	(3.64)	45.75	(4.25)
7660	42.65	(3.96)	49.48	(4.60)
8010	8.87	(0.82)	13.36	(1.24)
8016	12.59	(1.17)	17.34	(1.61)
8020	16.31	(1.52)	21.32	(1.98)
8026	20.03	(1.86)	25.30	(2.35)
8030	23.75	(2.21)	29.28	(2.72)
8036	27.47	(2.55)	33.26	(3.09)
8040	31.18	(2.90)	37.24	(3.46)
8046	34.90	(3.24)	41.22	(3.83)
8050	38.62	(3.59)	45.20	(4.20)
8056	42.34	(3.93)	49.18	(4.57)
8060	46.06	(4.28)	53.16	(4.94)

• Dimensions in parentheses are in square meters.

For picture, transom, half circle, quarter circle, circle and Springline™ window specifications, see pages 68-71.

Picture, Single Transom and Specialty Window Details – New Construction

Scale 1 ½" (38) = 1'-0" (305) – 1:8

1 ⅜" flange setback

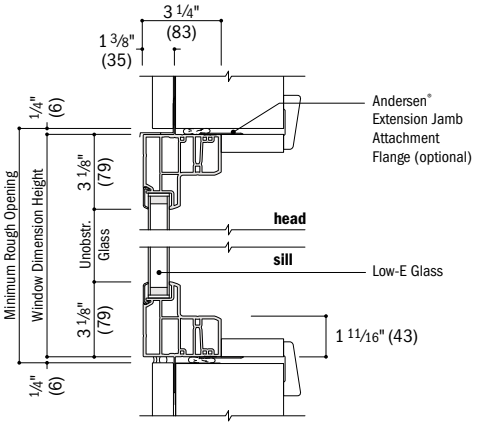

Vertical Section

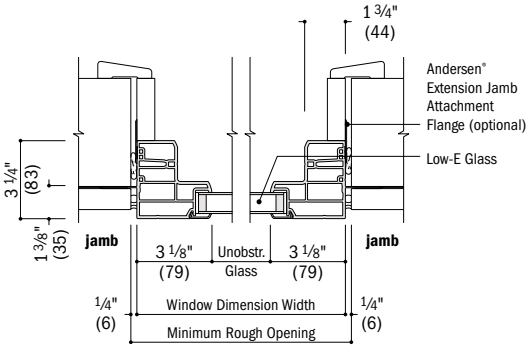

Horizontal Section

1" flange setback with stucco key

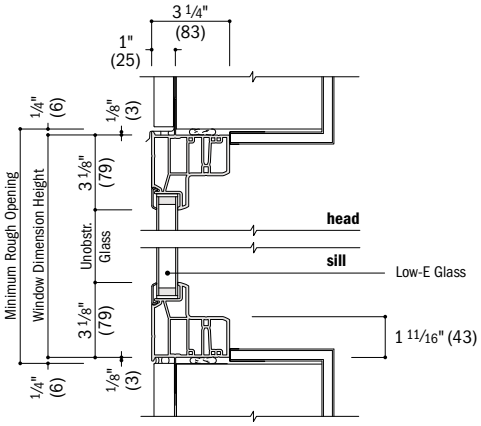

Vertical Section
Stucco Exterior

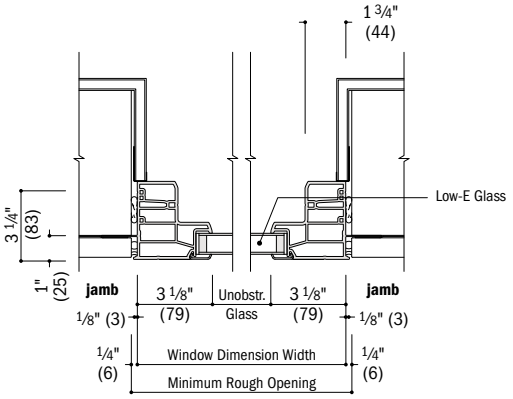

Horizontal Section
Stucco Exterior

Picture, Single Transom and Specialty Window Details – Replacement

Scale 1 ½" (38) = 1'-0" (305) – 1:8

no flange

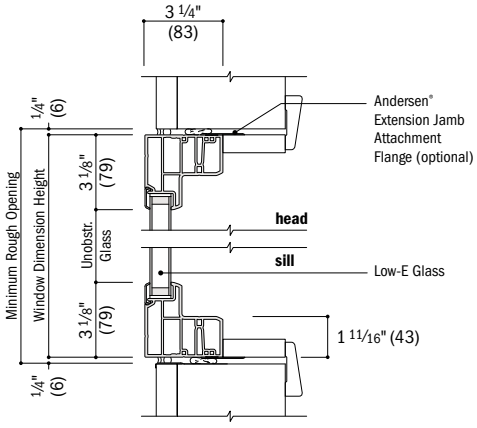

Vertical Section
Existing Framed Opening

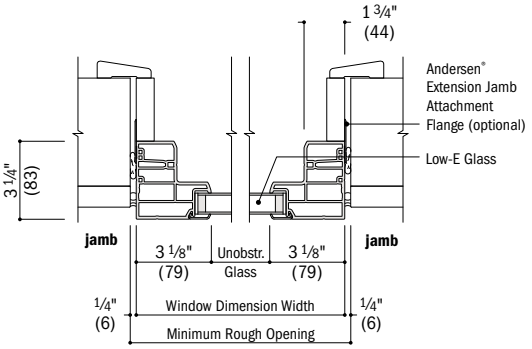

Horizontal Section
Existing Framed Opening

continued on next page

- Drip cap is required to complete window installation as shown but may not be included with the window. Use of drip cap is recommended for proper installation.
- Light-colored areas are parts included with window. Dark-colored areas are additional Andersen® parts required to complete window assembly as shown.
- **Minimum rough openings may need to be increased to allow for use of building wraps, flashing, sill panning, brackets, fasteners or other items. See installation information on page 110.**
- Details are for illustration only and are not intended to represent product installation methods or materials. Refer to product installation instructions at andersenwindows.com.
- Dimensions in parentheses are in millimeters.

Picture, Single Transom and Specialty Window Details – Replacement *(continued)*

Scale 1 1/2" (38) = 1'-0" (305) – 1:8

insert

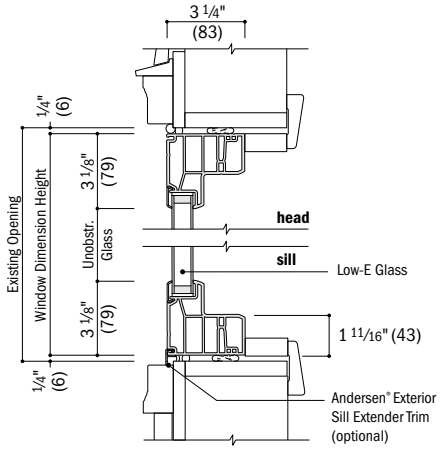

Vertical Section
Existing Window Opening

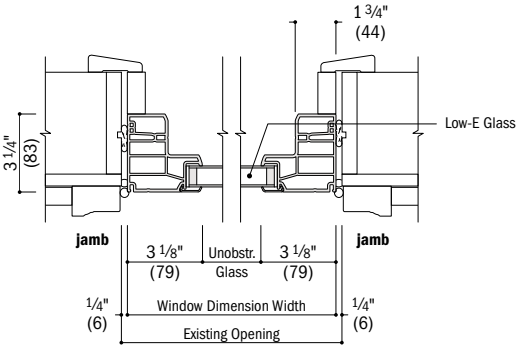

Horizontal Section
Existing Window Opening

Twin and Triple Transom Window Details – New Construction

Scale 1 1/2" (38) = 1'-0" (305) – 1:8

1 3/8" flange setback

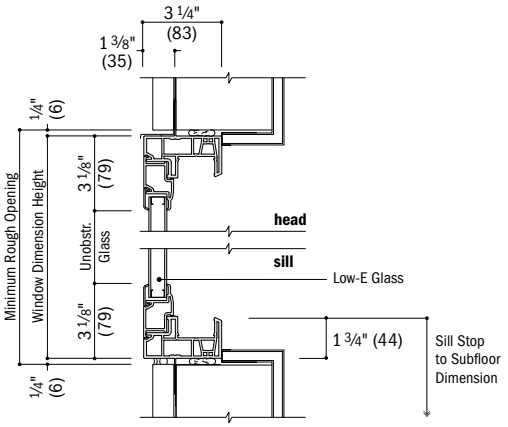

Vertical Section

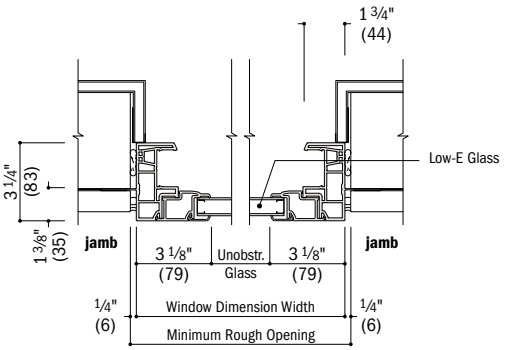

Horizontal Section

1" flange setback with stucco key

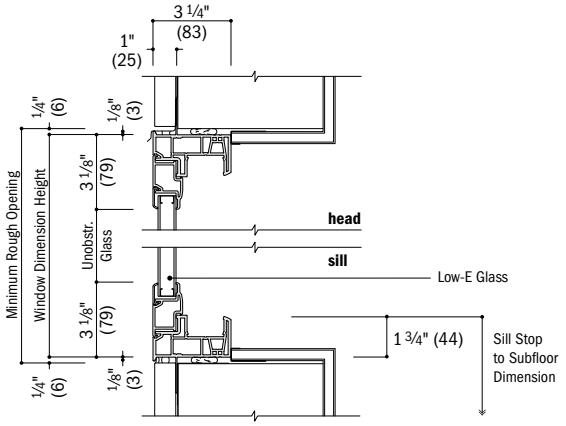

Vertical Section

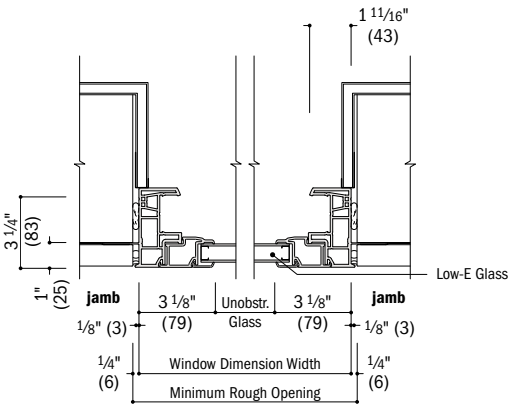

Horizontal Section

continued on next page

- Drip cap is required to complete window installation as shown but may not be included with the window. Use of drip cap is recommended for proper installation.
- Light-colored areas are parts included with window. Dark-colored areas are additional Andersen® parts required to complete window assembly as shown.
- **Minimum rough openings may need to be increased to allow for use of building wraps, flashing, sill panning, brackets, fasteners or other items. See installation information on page 110.**
- Details are for illustration only and are not intended to represent product installation methods or materials. Refer to product installation instructions at andersenwindows.com.
- Dimensions in parentheses are in millimeters.

Twin and Triple Transom Window Details – Replacement *(continued)*

Scale 1 1/2" (38) = 1'-0" (305) – 1:8

no flange

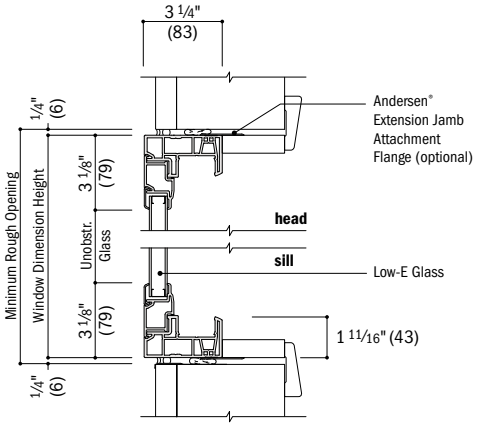

Vertical Section
Existing Framed Opening

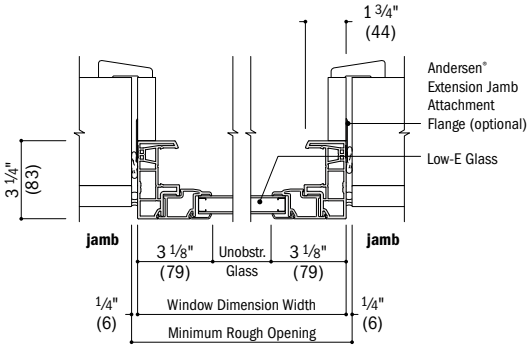

Horizontal Section
Existing Framed Opening

insert

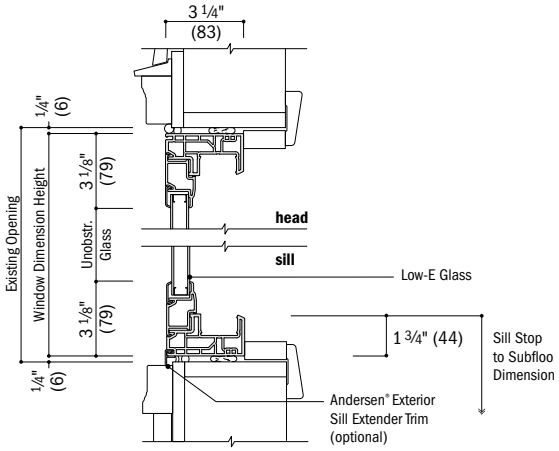

Vertical Section
Existing Window Opening

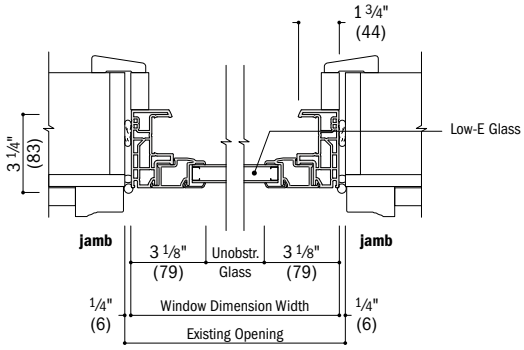

Horizontal Section
Existing Window Opening

integral

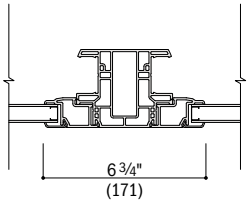

Horizontal Section
Twin or Triple Transom

Installation accessories for insert frame shown on page 109.

See pages 84-87 for joining details.

- Drip cap is required to complete window installation as shown but may not be included with the window. Use of drip cap is recommended for proper installation.
- Light-colored areas are parts included with window. Dark-colored areas are additional Andersen® parts required to complete window assembly as shown.
- **Minimum rough openings may need to be increased to allow for use of building wraps, flashing, sill panning, brackets, fasteners or other items. See installation information on page 110.**
- Details are for illustration only and are not intended to represent product installation methods or materials. Refer to product installation instructions at andersenwindows.com.
- Dimensions in parentheses are in millimeters.

WINDOW JOINING DETAILS

Vertical (ribbon) Fiberglass Joining Details – Non-Reinforced

Scale 1½" (38) = 1'-0" (305) — 1:8

Overall Window Dimension Width – Sum of individual window widths plus ½" (13) per join.

Overall Minimum Rough Opening Width – Overall window dimension width plus ¾" (19).

The addition of joining materials will affect the overall rough opening dimension. See page 110.

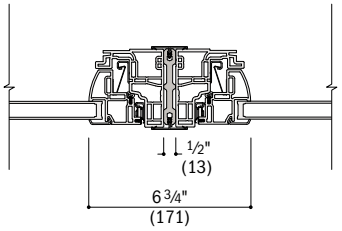

Casement to Casement
(Stationary Jamb to Stationary Jamb)

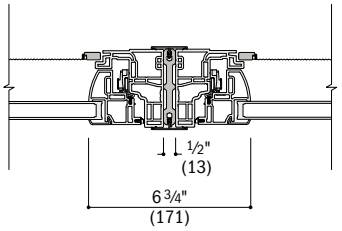

Casement to Casement
(Lock Jamb to Lock Jamb)

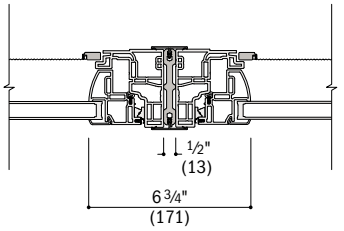

Casement to Casement
(Hinge Jamb to Hinge Jamb)

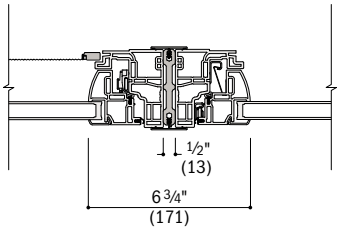

Casement to Casement
(Lock Jamb to Stationary Jamb)

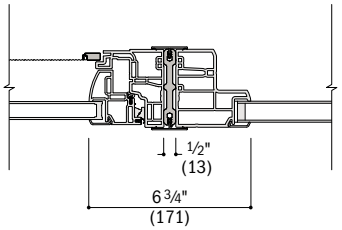

Casement to Picture/Single Transom
(Casement Hinge Jamb)

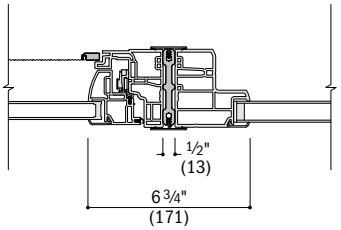

Casement to Picture/Single Transom
(Casement Lock Jamb)

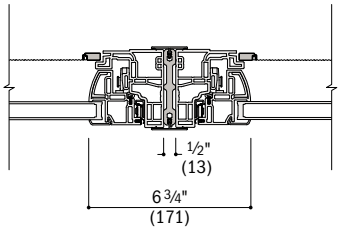

Awning to Awning

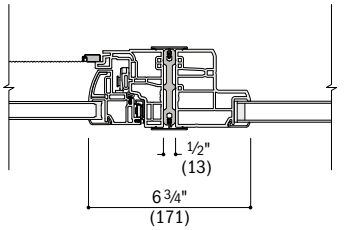

Awning to Picture/Single Transom

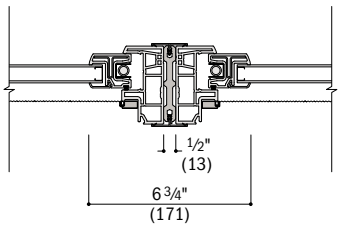

Single-Hung to Single-Hung

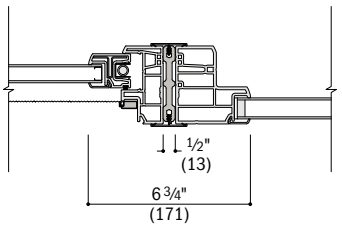

Single-Hung to Picture/Single Transom

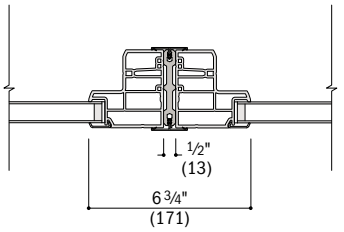

Picture/Single Transom to Picture/Single Transom

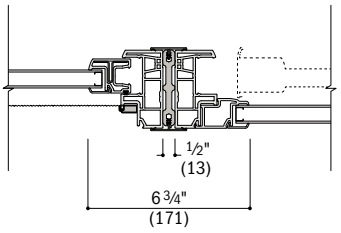

Gliding to Gliding
(Active Jamb to Stationary Jamb)

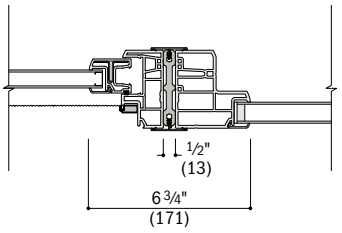

Gliding to Picture/Single Transom
(Gliding Active Jamb)

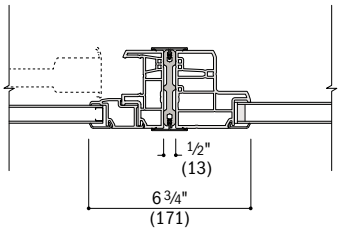

Gliding to Picture/Single Transom
(Gliding Stationary Jamb)

- **Minimum rough openings may need to be increased to allow for use of building wraps, flashing, sill panning, brackets, fasteners or other items. See installation information on page 110.**
- Details are for illustration only and are not intended to represent product installation methods or materials. Refer to product installation instructions at andersenwindows.com.
- Structural performance of any combination is only as high as the lowest structural performance of any individual unit or join in the combination.
- Dimensions in parentheses are in millimeters.

Horizontal (stack) Fiberglass Joining Details – Non-Reinforced

Scale 1½" (38) = 1'-0" (305) – 1:8

Overall Window Dimension Width – Sum of individual window widths plus ½" (13) per join.

Overall Minimum Rough Opening Width – Overall window dimension width plus ¾" (19).

The addition of joining materials will affect the overall rough opening dimension. See page 110.

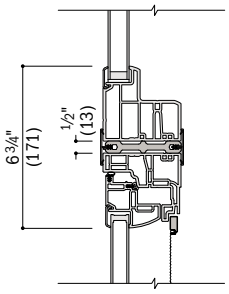

Picture/Single Transom/Specialty Over Casement

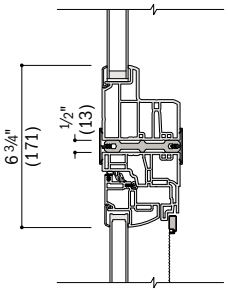

Picture/Single Transom/Specialty Over Awning

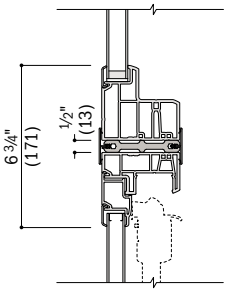

Picture/Single Transom/Specialty Over Single-Hung

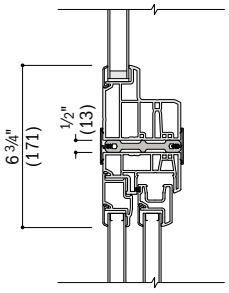

Picture/Single Transom/Specialty Over Gliding

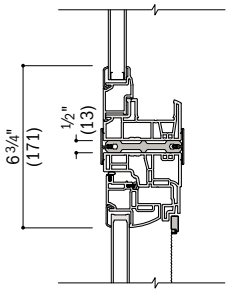

Twin Transom Over Twin Casement

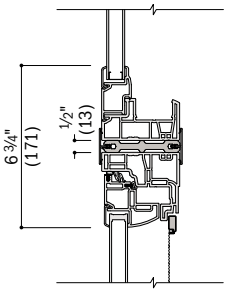

Twin Transom Over Twin Awning

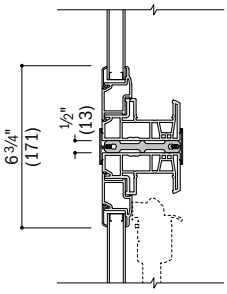

Twin Transom Over Twin Single-Hung

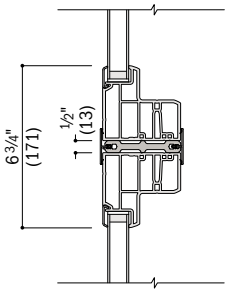

Picture/Single Transom/Specialty Over Picture/Single Transom

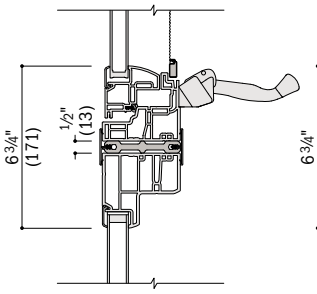

Casement Over Picture/Single Transom

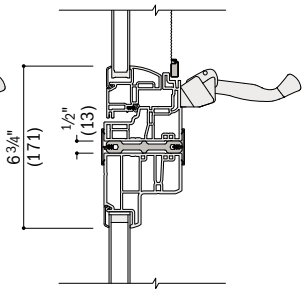

Awning Over Picture/Single Transom

For more information on joining, refer to the combination designs section starting on page 99.

- **Minimum rough openings may need to be increased to allow for use of building wraps, flashing, sill panning, brackets, fasteners or other items. See installation information on page 110.**
- Details are for illustration only and are not intended to represent product installation methods or materials. Refer to product installation instructions at andersenwindows.com.
- Structural performance of any combination is only as high as the lowest structural performance of any individual unit or join in the combination.
- Dimensions in parentheses are in millimeters.

Vertical (ribbon) Fiberglass Joining Details – Reinforced

Scale 1½" (38) = 1'-0" (305) — 1:8

Overall Window Dimension Width – Sum of individual window widths plus ¾" (19) per join.

Overall Minimum Rough Opening Width – Overall window dimension width plus ¾" (19).

The addition of joining materials will affect the overall rough opening dimension. See page 110.

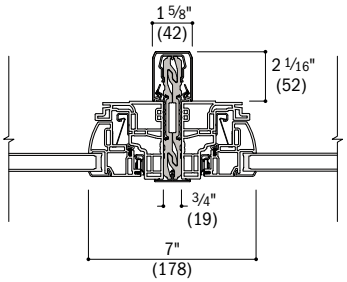

Casement to Casement
(Stationary Jamb to Stationary Jamb)

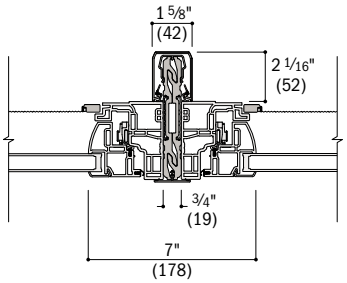

Casement to Casement
(Lock Jamb to Lock Jamb)

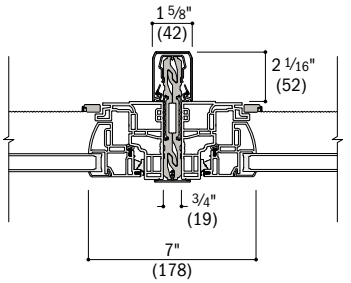

Casement to Casement
(Hinge Jamb to Hinge Jamb)

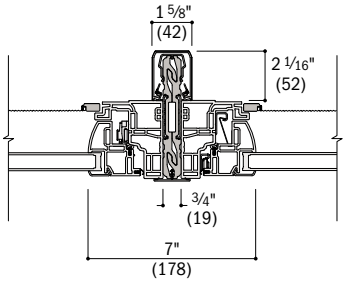

Casement to Casement
(Lock Jamb to Stationary Jamb)

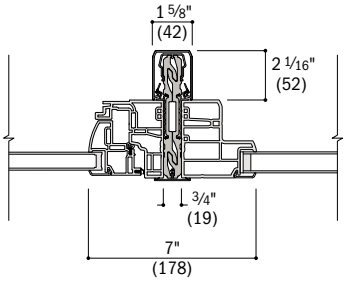

Casement to Picture/Single Transom
(Casement Hinge Jamb)

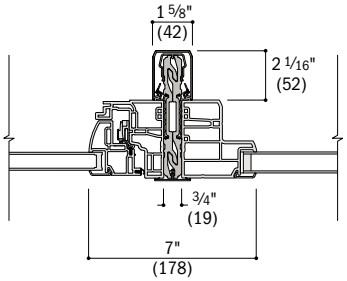

Casement to Picture/Single Transom
(Casement Lock Jamb)

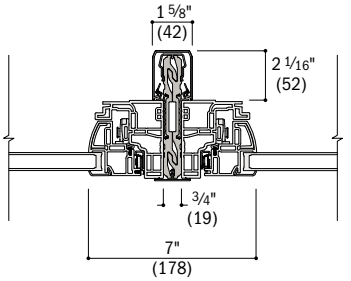

Awning to Awning

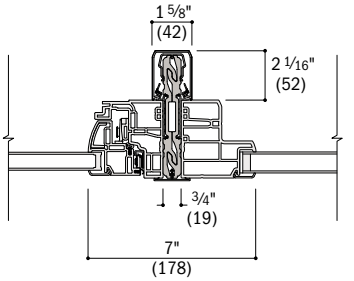

Awning to Picture/Single Transom

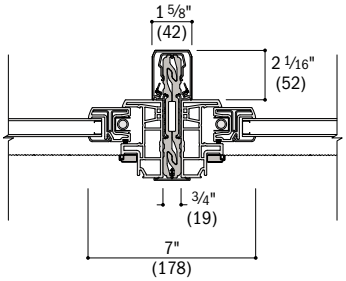

Single-Hung to Single-Hung

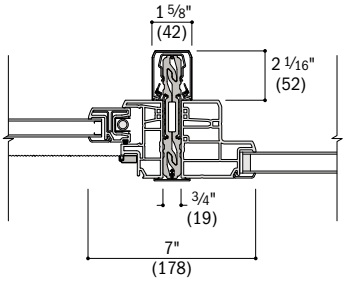

Single-Hung to Picture/Single Transom

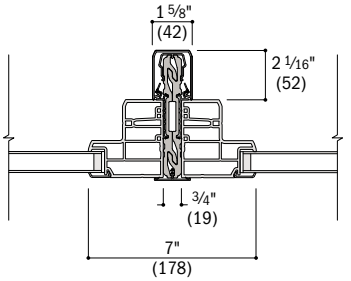

Picture/Single Transom to Picture/Single Transom

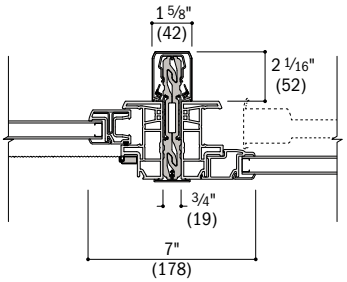

Gliding to Gliding
(Active Jamb to Stationary Jamb)

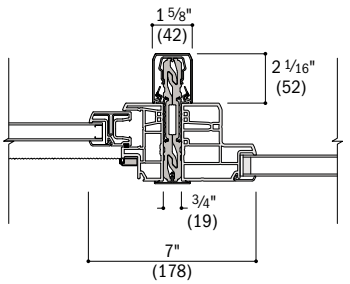

Gliding to Picture/Single Transom
(Gliding Active Jamb)

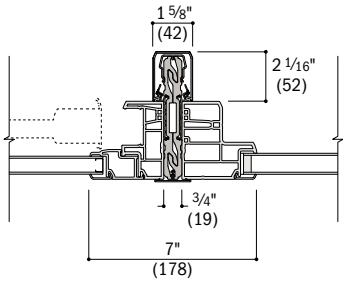

Gliding to Picture/Single Transom
(Gliding Stationary Jamb)

- **Minimum rough openings may need to be increased to allow for use of building wraps, flashing, sill panning, brackets, fasteners or other items. See installation information on page 110.**
- Details are for illustration only and are not intended to represent product installation methods or materials. Refer to product installation instructions at andersenwindows.com.
- Structural performance of any combination is only as high as the lowest structural performance of any individual unit or join in the combination.
- Dimensions in parentheses are in millimeters.

Horizontal (stack) Fiberglass Joining Details – Reinforced

Scale 1 1/2" (38) = 1'-0" (305) — 1:8

Overall Window Dimension Width – Sum of individual window widths plus 3/4" (19) per join.

Overall Minimum Rough Opening Width – Overall window dimension width plus 3/4" (19).

The addition of joining materials will affect the overall rough opening dimension. See page 110.

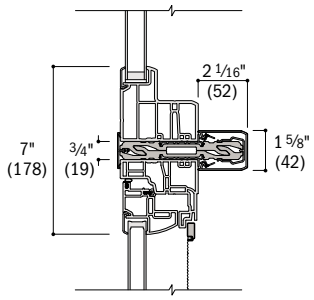

Picture/Single Transom/Specialty Over Casement

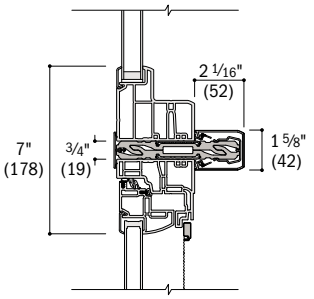

Picture/Single Transom/Specialty Over Awning

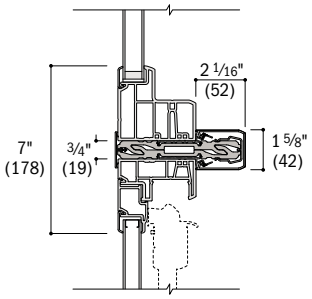

Picture/Single Transom/Specialty Over Single-Hung

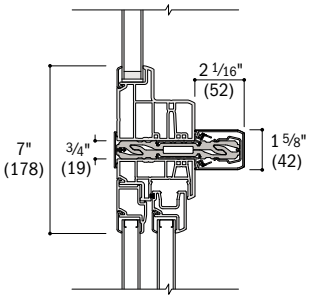

Picture/Single Transom/Specialty Over Gliding

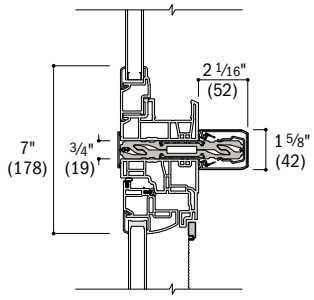

Twin Transom Over Twin Casement

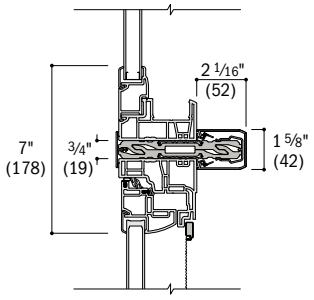

Twin Transom Over Twin Awning

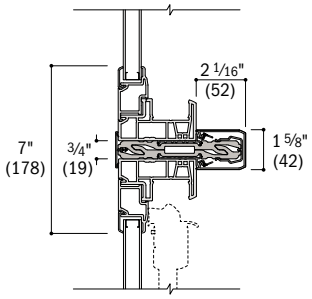

Twin Transom Over Twin Single-Hung

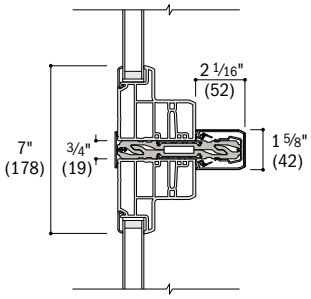

Picture/Single Transom/Specialty Over Picture/Single Transom

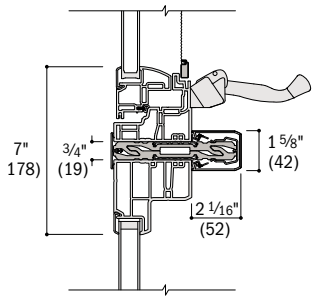

Casement Over Picture/Single Transom

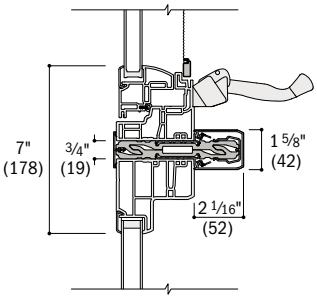

Awning Over Picture/Single Transom

For more information on joining, refer to the combination designs section starting on page 99.

- **Minimum rough openings may need to be increased to allow for use of building wraps, flashing, sill panning, brackets, fasteners or other items. See installation information on page 110.**
- Details are for illustration only and are not intended to represent product installation methods or materials. Refer to product installation instructions at andersenwindows.com.
- Structural performance of any combination is only as high as the lowest structural performance of any individual unit or join in the combination.
- Dimensions in parentheses are in millimeters.

WINDOW CUSTOM SIZES

Custom Sizes and Specification Formulas

100 Series custom-size windows are available in 1/8" (3) increments between minimum and maximum widths and heights shown. Some restrictions apply.

Casement Windows

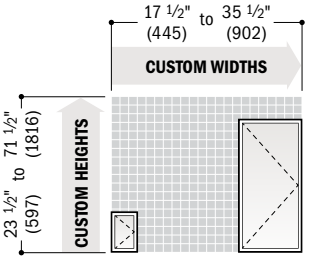

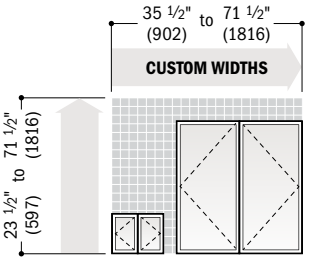

Single

Clear Opening 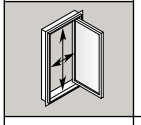	**Width** = window width − 12.103" (307) *wash mode** **Width** = window width − 7.790" (198) *widest clear opening** **Height** = window height − 5.694" (145)	**Minimum R.O.** 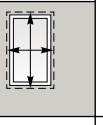	**Width** = window width + 1/2" (13) **Height** = window height + 1/2" (13)
Vent Opening 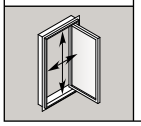	**Width** = window width − 7.964" (202) **Height** = window height − 5.694" (145)	**Unobst. Glass**	**Width** = window width − 6.250" (159) **Height** = window height − 6.250" (159)

Twin

Clear Opening 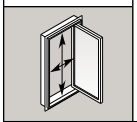	**Width** = (window width ÷ 2) − 12.353" (314) *wash mode** **Width** = (window width ÷ 2) − 8.040" (204) *widest clear opening** **Height** = window height − 5.694" (145)	**Minimum R.O.** 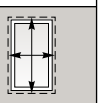	**Width** = window width + 1/2" (13) **Height** = window height + 1/2" (13)
Vent Opening 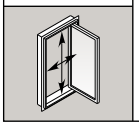	**Width** = window width − 16.428" (417) **Height** = window height − 5.694" (145)	**Unobst. Glass**	**Single Sash Width** = (window width ÷ 2) − 6.50" (165) **Total Sash Width** = window width − 13.000" (330) **Height** = window height − 6.250" (159)

*Widest clear opening hinge will be applied, based on window size, if it allows the window to meet or exceed clear opening area of 5.7 sq.ft. or 0.53 m², clear opening width of 20" (508) and clear opening height of 24" (610). Hinge type cannot be specified.

Awning Windows

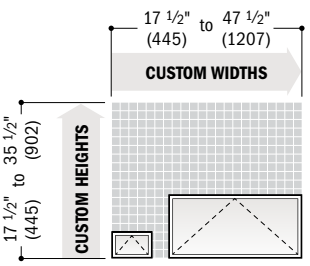

Single

Clear Opening 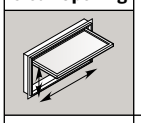	**Width** = window width − 5.694" (145) **Depth** = 8.000" (203)	**Minimum R.O.** 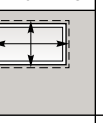	**Width** = window width + 1/2" (13) **Height** = window height + 1/2" (13)
Vent Opening 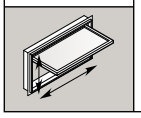	**Width** = window width − 5.694" (145) **Depth** = 8.000" (203)	**Unobst. Glass** 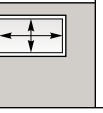	**Width** = window width − 6.250" (159) **Height** = window height − 6.250" (159)

• Awning windows do not meet clear opening area of 5.7 sq.ft. or 0.53 m², clear opening width of 20" (508) and clear opening height of 24" (610).

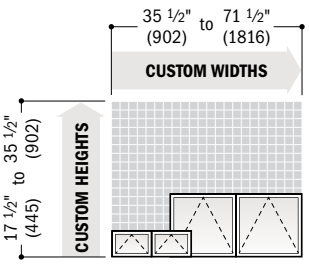

Twin

Clear Opening 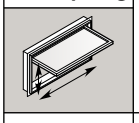	**Width** = (window width ÷ 2) − 5.944" (151) **Depth** = 8.000" (203)	**Minimum R.O.** 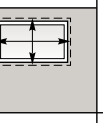	**Width** = window width + 1/2" (13) **Height** = window height + 1/2" (13)
Vent Opening 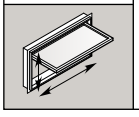	**Width** = (window width ÷ 2) − 5.944" (151) **Depth** = 8.000" (203)	**Unobst. Glass** 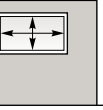	**Single Sash Width** = (window width ÷ 2) − 6.50" (165) **Total Sash Width** = window width − 13.000" (330) **Height** = window height − 6.250" (159)

• Awning windows do not meet clear opening area of 5.7 sq.ft. or 0.53 m², clear opening width of 20" (508) and clear opening height of 24" (610).

• **Clear Opening** formulas provide dimensions for determining area available for egress. **Vent Opening** formulas provide dimensions for determining area available for passage of air. **Minimum R.O.** (minimum rough opening) formulas provide minimum rough opening width and height dimensions. **Unobst. Glass** (unobstructed glass) formulas provide dimensions for determining area available for passage of light.
• Dimensions in parentheses are in millimeters.

Awning Windows *(continued)*

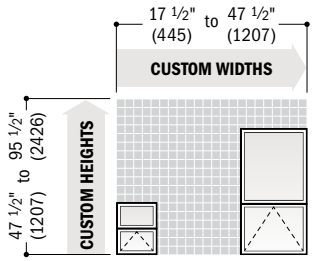

Contact your Andersen supplier for min./max. height dimensions for lower venting sash.

Picture Window Over Awning

Clear Opening 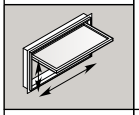	**Width** = window width − 5.694" (145) **Depth** = 8.000" (203)	**Minimum R.O.**	**Width** = window width + 1/2" (13) **Height** = window height + 1/2" (13)
Vent Opening 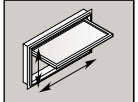	**Width** = window width − 5.694" (145) **Depth** = 8.000" (203)	**Unobst. Glass**	**Width** = window width − 6.250" (159) **Total Sash Height** = window height − 13.000" (330) *Contact your Andersen supplier for unobstructed glass height dimension of individual stationary sash or venting sash.*

• Awning windows do not meet clear opening area of 5.7 sq. ft. or 0.53 m², clear opening width of 20" (508) and clear opening height of 24" (610).

Single-Hung Windows

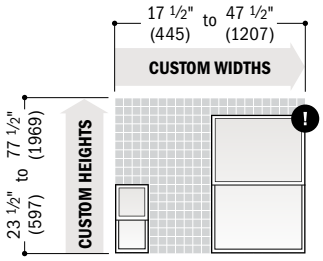

Windows with a height greater than 77 1/2" (1969) are only available with a 2:1 reverse cottage sash ratio.*

Equal Sash Ratio

Clear Opening	**Width** = window width − 3.500" (89) **Height** = (window height ÷ 2) − 3.711" (94)	**Minimum R.O.**	**Width** = window width + 1/2" (13) **Height** = window height + 1/2" (13)
Vent Opening	**Equal Sash Ratio** **Width** = window width − 3.500" (89) **Height** = (window height ÷ 2) − 3.711" (94)	**Unobst. Glass**	**Equal Sash Ratio** **Width** = window width − 6.250" (159) **Fixed Sash Height** = (window height ÷ 2) − 4.184" (106) **Venting Sash Height** = (window height ÷ 2) − 4.226" (107) **Total Sash Height** = window height − 8.410" (214)

• Drywall pass-through window is available for custom-size windows wider than 23 1/2" (597) and taller than 53 1/2" (1359).
• Windows with a 3:2 reverse cottage sash ratio are available in custom sizes from 17 1/2" (445) to 47 1/2" (1207) in width to 29 1/2" (749) to 77 1/2" (1969) in height. For area and opening specification formulas, visit andersenwindows.com.
* Window heights that require a 2:1 reverse cottage sash ratio are available in custom sizes from 17 1/2" (445) to 47 1/2" (1207) in width to 77 5/8" (1972) to 89 1/2" (2273) in height. For area and opening specifications, contact your Andersen supplier.

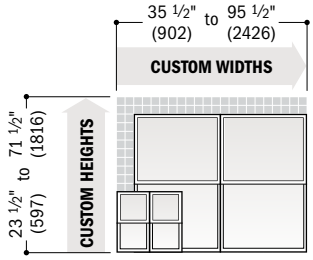

Twin

Clear Opening	**Width** = (window width ÷ 2) − 3.750" (95) **Height** = (window height ÷ 2) − 3.711" (94)	**Minimum R.O.**	**Width** = window width + 1/2" (13) **Height** = window height + 1/2" (13)
Vent Opening	**Equal Sash Ratio** **Width** = window width − 3.500" (89) **Height** = (window height ÷ 2) − 3.711" (94)	**Unobst. Glass**	**Single Sash Width** = (window width ÷ 2) − 6.500" (165) **Total Sash Width** = window width − 13.000" (330) **Fixed Sash Height** = (window height ÷ 2) − 4.184" (106) **Venting Sash Height** = (window height ÷ 2) − 4.226" (107) **Total Sash Height** = window height − 8.410" (214)

Triple

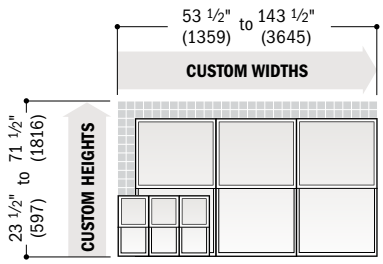

Clear Opening	**Width** = (window width ÷ 3) − 3.833" (97) **Height** = (window height ÷ 2) − 3.711" (94)	**Minimum R.O.**	**Width** = window width + 1/2" (13) **Height** = window height + 1/2" (13)
Vent Opening	**Equal Sash Ratio** **Width** = window width − 11.500" (292) **Height** = (window height ÷ 2) − 3.711" (94)	**Unobst. Glass**	**Single Sash Width** = (window width ÷ 3) − 6.583" (167) **Total Sash Width** = window width − 19.750" (502) **Fixed Sash Height** = (window height ÷ 2) − 4.184" (106) **Venting Sash Height** = (window height ÷ 2) − 4.226" (107) **Total Sash Height** = window height − 8.410" (214)

• **Clear Opening** formulas provide dimensions for determining area available for egress. **Vent Opening** formulas provide dimensions for determining area available for passage of air. **Minimum R.O.** (minimum rough opening) formulas provide minimum rough opening width and height dimensions. **Unobst. Glass** (unobstructed glass) formulas provide dimensions for determining area available for passage of light.
• Dimensions in parentheses are in millimeters.

WINDOW CUSTOM SIZES

Gliding Windows

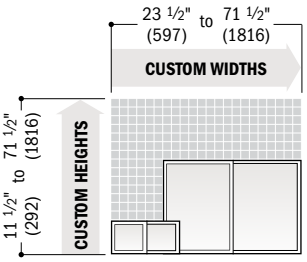

Active-Stationary or Stationary-Active (XO/OX)

Clear Opening	**Width** = (window width ÷ 2) − 3.711" (94) **Height** = window height − 3.500" (89)	**Minimum R.O.**	**Width** = window width + ½" (13) **Height** = window height + ½" (13)
Vent Opening	**Width** = (window width ÷ 2) − 3.711" (94) **Height** = window height − 3.500" (89)	**Unobst. Glass**	**Fixed Sash Width** = (window width ÷ 2) − 4.184" (106) **Venting Sash Width** = (window width ÷ 2) − 4.226" (107) **Total Sash Width** = window width − 8.410" (214) **Height** = window height − 6.250" (159)

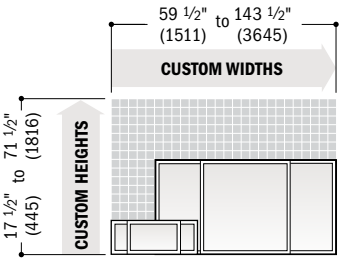

Active-Stationary-Active (XOX) 1:2:1 Sash Ratio

Clear Opening	**Width** = (window width ÷ 4) − 2.976" (76) **Height** = window height − 3.500" (89)	**Minimum R.O.**	**Width** = window width + ½" (13) **Height** = window height + ½" (13)
Vent Opening	**Width** = (window width ÷ 2) − 5.952" (151) **Height** = window height − 3.500" (89)	**Unobst. Glass**	**Fixed Sash Width** = (window width ÷ 2) − 1.868" (47) **Venting Sash Width** = (window width ÷ 4) − 4.351" (111) **Total Sash Width** = window width − 10.570" (268) **Height** = window height − 6.250" (159)

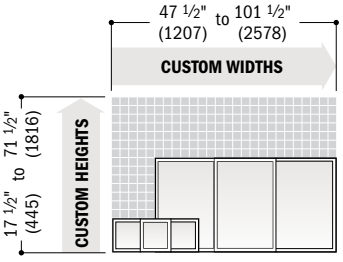

Active-Stationary-Active (XOX) 1:1:1 Equal Sash Ratio

Clear Opening	**Width** = (window width ÷ 3) − 5.164" (131) **Height** = window height − 3.500" (89)	**Minimum R.O.**	**Width** = window width + ½" (13) **Height** = window height + ½" (13)
Vent Opening	**Width** = (window width ÷ 3) − 5.164" (131) **Height** = window height − 3.500" (89)	**Unobst. Glass**	**Fixed Sash Width** = (window width ÷ 3) − 3.496" (89) **Venting Sash Width** = (window width ÷ 3) − 3.537" (90) **Total Sash Width** = window width − 10.570" (268) **Height** = window height − 6.250" (159)

Picture and Transom Windows

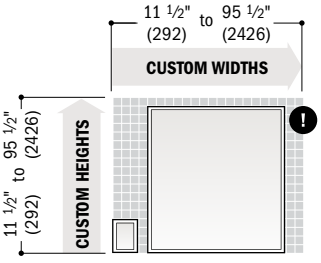

Either height or width must be 71 ½" (1816) or less.

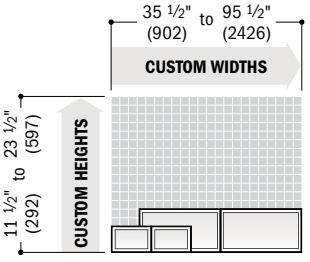

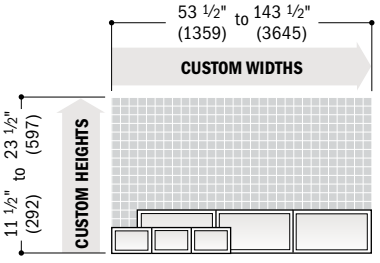

Triple transom windows with unequal sash are not available in custom sizes.

Picture and Single Transom

Minimum R.O.	**Width** = window width + ½" (13) **Height** = window height + ½" (13)
Unobst. Glass	**Width** = window width − 6.250" (159) **Height** = window height − 6.250" (159)

Twin and Triple Transom

Minimum R.O.	**Twin** **Width** = window width + ½" (13) **Height** = window height + ½" (13)	**Triple** **Width** = window width + ½" (13) **Height** = window height + ½" (13)
Unobst. Glass	**Twin** **Single Sash Width** = (window width ÷ 2) − 6.500" (165) **Total Sash Width** = window width − 13.000" (330) **Height** = window height − 6.250" (159)	**Triple** **Single Sash Width** = (window width ÷ 3) − 6.583" (167) **Total Sash Width** = window width − 19.750" (502) **Height** = window height − 6.250" (159)

• **Clear Opening** formulas provide dimensions for determining area available for egress. **Vent Opening** formulas provide dimensions for determining area available for passage of air. **Minimum R.O.** (minimum rough opening) formulas provide minimum rough opening width and height dimensions. **Unobst. Glass** (unobstructed glass) formulas provide dimensions for determining area available for passage of light.
• Dimensions in parentheses are in millimeters.

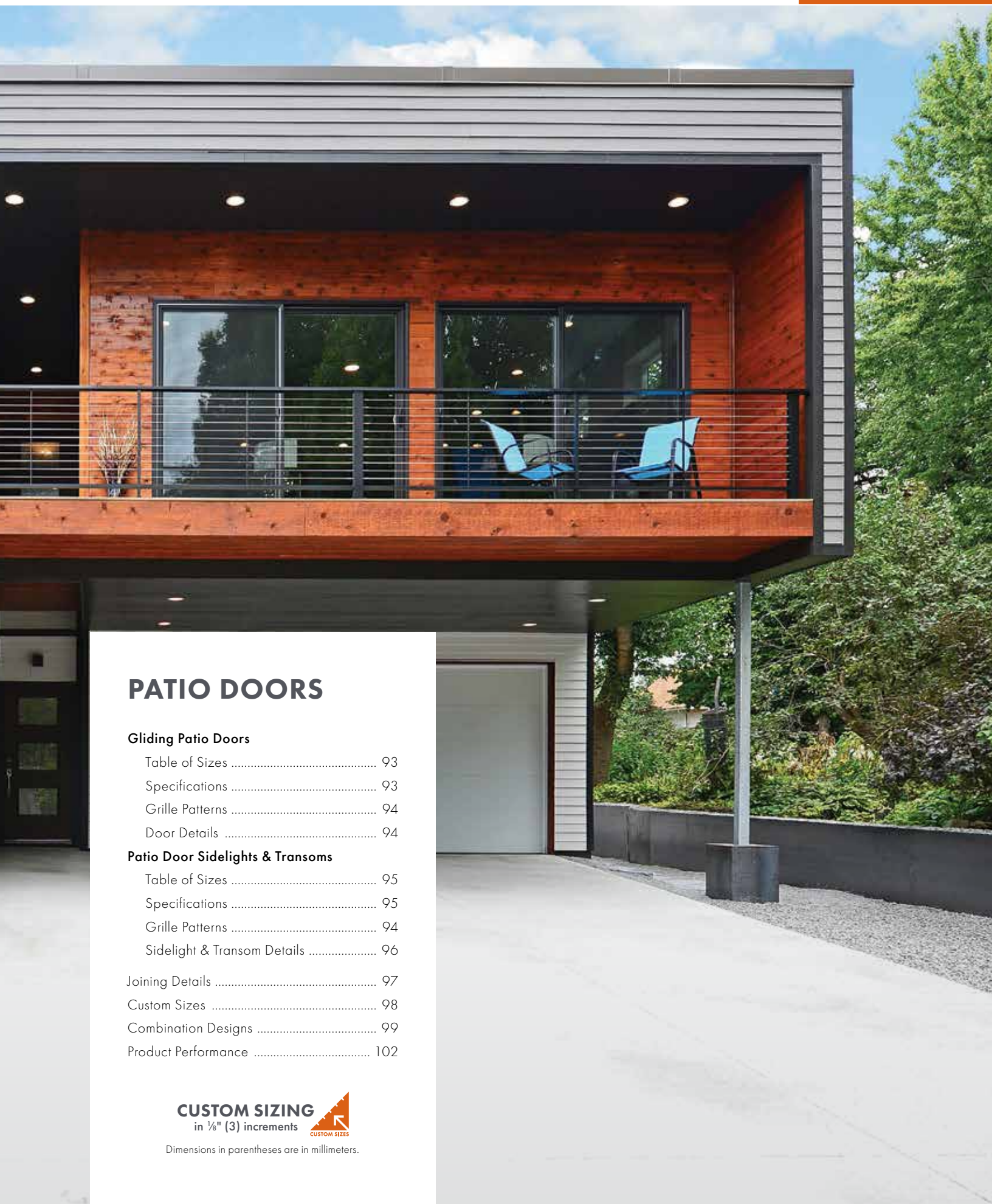

PATIO DOORS

Gliding Patio Doors

Table of Sizes 93
Specifications 93
Grille Patterns 94
Door Details 94

Patio Door Sidelights & Transoms

Table of Sizes 95
Specifications 95
Grille Patterns 94
Sidelight & Transom Details 96

Joining Details 97
Custom Sizes 98
Combination Designs 99
Product Performance 102

CUSTOM SIZING
in ⅛" (3) increments
CUSTOM SIZES

Dimensions in parentheses are in millimeters.

FEATURES

GLIDING PATIO DOORS

FRAME

A The frame is constructed with Fibrex® composite material. This construction produces a rigid frame.

B Durable, low-maintenance finish won't fade, flake, blister or peel.*

Factory-assembled doors arrive at the job site ready to install.

C Dual felt weatherstrip, applied on the inside pocket of both side jambs and the head jamb, creates a positive seal between the frame and panels. The result is a long-lasting,* energy-efficient barrier against wind, water and dust.

A full-length combination weatherstrip/interlock system provides a flexible seal at the meeting stile.

Three frame options include:

- 1 3/8" (35) flange setback for siding applications. An integral rigid vinyl flange helps seal the unit to the structure.
- 1" (25) flange setback with stucco key. An integral rigid vinyl flange helps seal the unit to the structure.
- No-flange option for door replacement in an existing framed opening.

PANEL

D Fibrex material construction provides long-lasting performance.* The panel, finished with a durable capping, provides maximum protection and a matte, low-maintenance finish.

E Dual corrosion-resistant* ball-bearing rollers on the operating door panel provide smooth operation with self-contained leveling adjusters. The rollers have deep grooves to increase engagement with the roller track and resist lateral movement. Metal reinforcement inserted into the panel stiles provides additional stability.

SILL

F The one-piece sill design with weep holes located on the sill exterior provides superior water management. The heavy-gauge PVC construction is wear resistant and neutral gray in color.

G The roller track has a stainless steel cap that resists denting for smooth, reliable operation.

GLASS

A glazing bead and silicone provide superior weathertightness and durability.

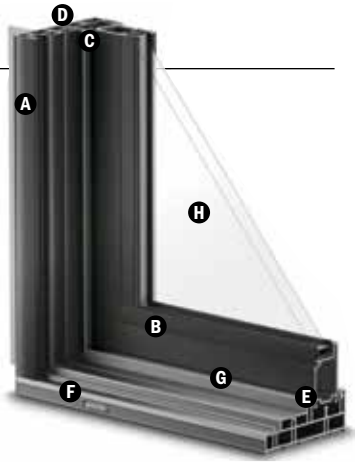

H High-Performance options include:

- Low-E SmartSun™ tempered glass
- Low-E SmartSun HeatLock® tempered glass
- Low-E tempered glass
- Low-E HeatLock tempered glass
- Low-E Sun tempered glass
- Low-E PassiveSun® tempered glass
- Low-E PassiveSun HeatLock tempered glass
- Clear Dual-Pane tempered glass

Additional glass options are available. Contact your Andersen supplier.

A removable translucent film helps shield the glass from damage during delivery and construction, and simplifies finishing at the job site.

Patterned Glass

Patterned glass options are available. See page 12 for more details.

Glass Spacers

Glass spacers are now available in black, in addition to stainless steel, to provide more ways to customize project designs and achieve a contemporary look. (E-Series window is shown above.)

HARDWARE

Locking System

A two-point locking system engages a steel receiver plate that's secured into the side jamb. This provides enhanced security and a weathertight seal, with the operating panel pulled tightly into the jamb.

COLOR OPTIONS

EXTERIOR COLORS

White | Sandtone | Terratone | Dark Bronze | Black

INTERIOR COLORS

White | Sandtone** | Dark Bronze** | Black**

HARDWARE

Standard Handle

TULSA

Exterior handle matches the door's exterior color. Interior handle matches the door's interior color. Dark bronze exterior and white interior shown.

Optional Handle

AFTON

Antique Brass | Black
Bright Brass | **Satin Nickel**

Bold name denotes finish shown.

AFTON HARDWARE FINISHES

Antique Brass | Black | Bright Brass | Satin Nickel

Finishes shown are for Afton hardware only.

ACCESSORIES Sold Separately

HARDWARE

Auxiliary Foot Lock

Provides an extra measure of security when the door is in a locked position. Available in colors that coordinate with the interior.

GRILLES

Grilles are available in a variety of configurations. See page 13 for details.

INSECT SCREENS

Insect screens have charcoal gray fiberglass screen mesh. The latch mechanism is contained within the insect screen handle for easy operation. Frames are available in colors to match the door exterior.

SIDELIGHTS & TRANSOMS

Patio door sidelights and transoms are available. See pages 95-96.

*Visit andersenwindows.com/warranty for details.
**Products with Sandtone, dark bronze and black interiors have matching exteriors.
Dimensions in parentheses are in millimeters.
Printing limitations prevent exact replication of colors and finishes.
See your Andersen supplier for actual color and finish samples.

Patio Door Heights

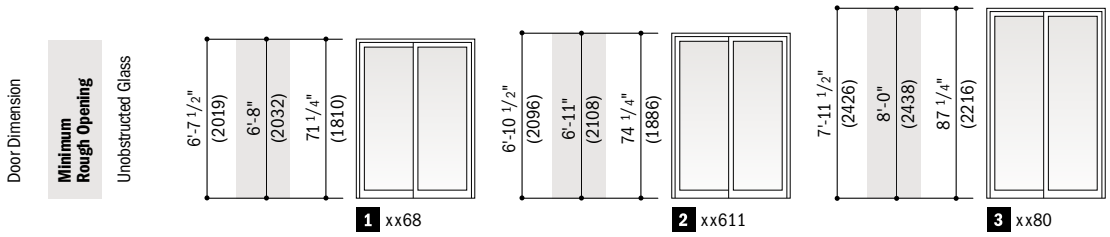

Table of Gliding Patio Doors Sizes

Scale 1/8" (3) = 1'-0" (305) – 1:96

Door Dimension	4'-11 1/4" (1505)	4'-11 1/4" (1505)	5'-11 1/4" (1810)	5'-11 1/4" (1810)
Minimum Rough Opening	5'-0" (1524)	5'-0" (1524)	6'-0" (1829)	6'-0" (1829)
Unobstructed Glass (width of single panel only)	24 1/8" (613)	24 1/8" (613)	30 1/8" (765)	30 1/8" (765)
3 heights				
1	5068**L**	5068**R**	6068**L**	6068**R**
2	50611**L**	50611**R**	60611**L**	60611**R**
3	5080**L**	5080**R**	6080**L**	6080**R**

Door Dimension	7'-11 1/4" (2419)	7'-11 1/4" (2419)
Minimum Rough Opening	8'-0" (2438)	8'-0" (2438)
	42 1/8" (1070)	42 1/8" (1070)
3 heights		
1	8068**L***	8068**R***
2	80611**L***	80611**R***
3	8080**L***	8080**R***

- "Door Dimension" always refers to outside frame-to-frame dimension.
- **"Minimum Rough Opening" dimensions may need to be increased to allow for use of building wraps, flashing, sill panning, brackets, fasteners or other items. See page 110 for more details.**
- Dimensions in parentheses are in millimeters.

*Meets or exceed a 32" (813) clear opening width.

Custom-size patio doors are available in 1/8" (3) increments. See page 98 for custom sizes and specifications.

Arrow indicates direction of panel operation as viewed from the exterior. Details and grille patterns shown on page 94.

To meet or exceed a clear opening width of 32" (813), select a door width that requires a rough opening width of 6'-6" (1981) or greater.

Order Designation Description

Viewed from the exterior.

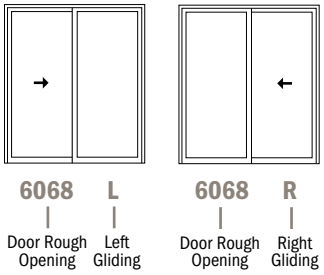

Gliding Patio Door Opening and Area Specifications

Door Number	Clear Opening Area* Sq. Ft./(m²)	Clear Opening in Full Open Position: Width* Inches/(mm)	Clear Opening in Full Open Position: Height Inches/(mm)	Glass Area Sq. Ft./(m²)	Vent Area* Sq. Ft./(m²)	Overall Door Area Sq. Ft./(m²)
5068	12.38 (1.15)	23 1/2" (597)	75 7/8" (1927)	23.87 (2.22)	12.38 (1.15)	32.71 (3.04)
6068	15.54 (1.44)	29 1/2" (749)	75 7/8" (1927)	31.27 (2.91)	15.54 (1.44)	39.34 (3.65)
8068	21.87 (2.03)	41 1/2" (1054)	75 7/8" (1927)	43.14 (4.01)	21.87 (2.03)	52.59 (4.89)
50611	12.87 (1.20)	23 1/2" (597)	78 7/8" (2003)	52.79 (4.90)	12.87 (1.20)	33.95 (3.15)
60611	16.16 (1.50)	29 1/2" (749)	78 7/8" (2003)	32.58 (3.03)	16.16 (1.50)	40.82 (3.79)
80611	22.73 (2.11)	41 1/2" (1054)	78 7/8" (2003)	44.96 (4.18)	22.73 (2.11)	54.57 (5.07)
5080	14.99 (1.39)	23 1/2" (597)	91 7/8" (2334)	31.02 (2.88)	14.99 (1.39)	39.29 (3.65)
6080	18.82 (1.75)	29 1/2" (749)	91 7/8" (2334)	38.29 (3.56)	18.82 (1.75)	47.25 (4.39)
8080	26.48 (2.46)	41 1/2" (1054)	91 7/8" (2334)	52.83 (4.91)	26.48 (2.46)	63.17 (5.87)

- Dimensions in parentheses are in millimeters or square meters.

*For doors with Tulsa hardware only. Contact your Andersen supplier for doors with Afton hardware.

Grille Patterns

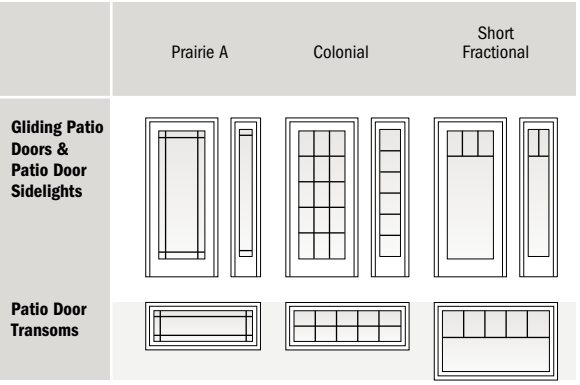

Number of lights and overall pattern varies with door size. Patterns shown may not be available for all sizes. Specified equal light and custom patterns are also available.

For specified equal light, specify number of same-size rectangles across or down.

For more information on divided light, see page 13 or visit **andersenwindows.com/grilles**.

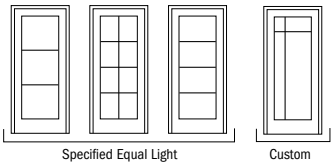

Gliding Patio Door Details

Scale 1 1/2" (38) = 1'-0" (305) – 1:8

1 3/8" flange setback

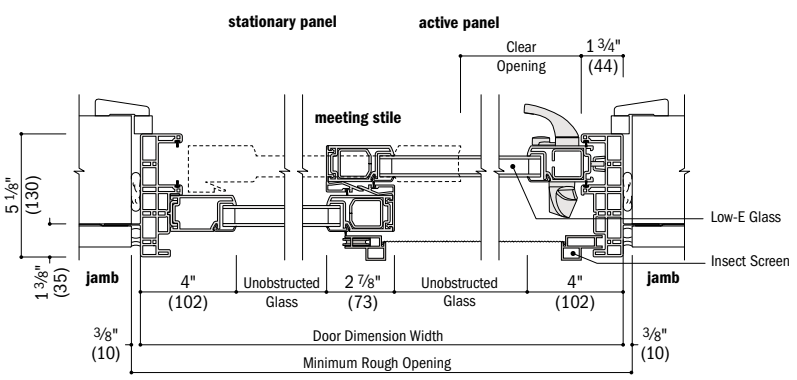

Horizontal Section

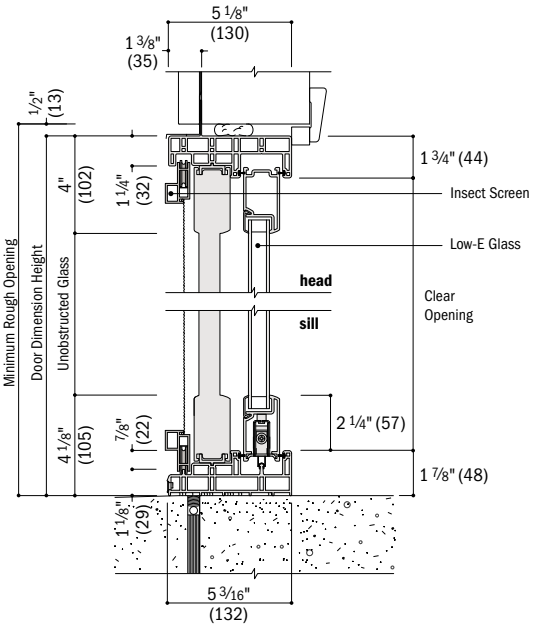

Vertical Section

1" flange setback with stucco key

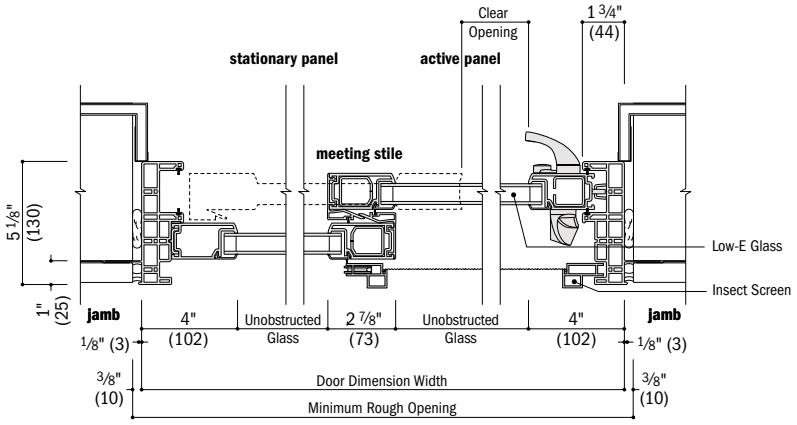

Horizontal Section
Stucco Exterior

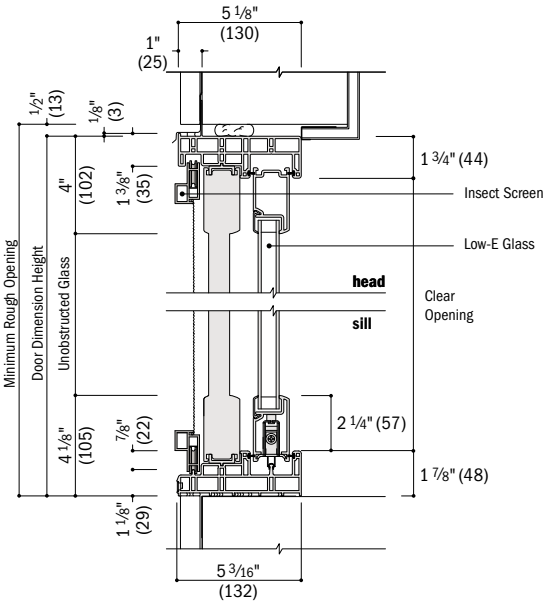

Vertical Section
Stucco Exterior

See page 97 for joining details.

- Drip cap is required to complete door installation as shown but may not be included with the door. Use of drip cap is recommended for proper installation.
- **Minimum rough openings may need to be increased to allow for use of building wraps, flashing, sill panning, brackets, fasteners or other items. See installation information on page 110.**
- Details are for illustration only and are not intended to represent product installation methods or materials. Refer to product installation instructions at andersenwindows.com.
- Dimensions in parentheses are in millimeters.

Table of Patio Door Transom and Sidelight Sizes

Scale 1/8" (3) = 1'-0" (305) – 1:96

Transom/Sidelight Dimension	1'-2 1/4" (362)	1'-5 1/4" (438)	1'-11 1/4" (591)	2'-5 1/4" (743)	2'-11 1/4" (895)	3'-11 1/4" (1200)	4'-11 1/4" (1505)	5'-11 1/4" (1810)	7'-11 1/4" (2419)
Minimum Rough Opening	1'-3" (381)	1'-6" (457)	2'-0" (610)	2'-6" (762)	3'-0" (914)	4'-0" (1219)	5'-0" (1524)	6'-0" (1829)	8'-0" (2438)
Unobstructed Glass	6 3/16" (157)	9 3/16" (233)	15 3/16" (386)	21 3/16" (538)	27 3/16" (691)	39 3/16" (995)	51 3/16" (1300)	63 3/16" (1605)	87 3/16" (2215)

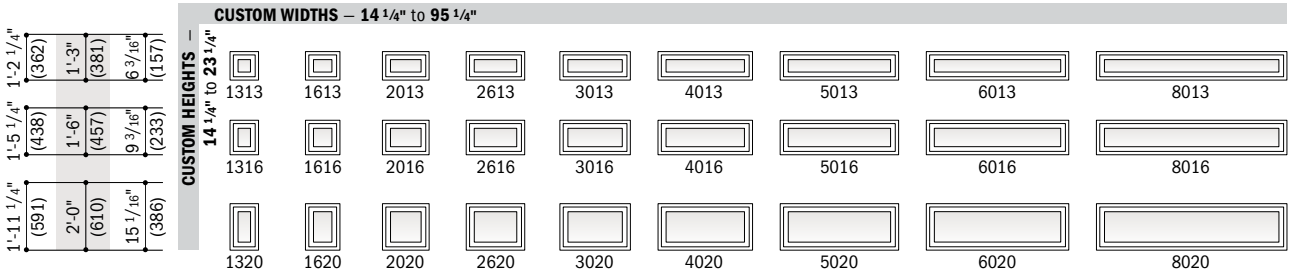

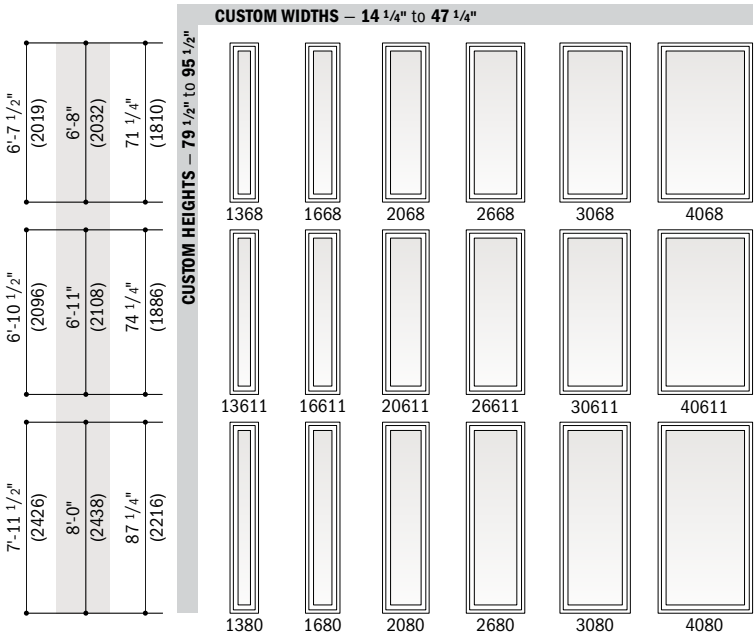

Custom-size doors are available in 1/8" (3) increments.

See page 98 for custom sizes and specifications.

Details shown on page 96.

Grille patterns shown on page 94.

- "Transom/Sidelight Dimension" always refers to outside frame-to-frame dimension.
- **"Minimum Rough Opening" dimensions may need to be increased to allow for use of building wraps, flashing, sill panning, brackets, fasteners or other items. See page 110 for more details.**
- Dimensions in parentheses are in millimeters.

Patio Door Sidelight Area Specifications

Sidelight Number	Glass Area Sq. Ft./(m²)		Overall Window Area Sq. Ft./(m²)	
1368	3.06	(0.28)	7.87	(0.73)
13611	3.19	(0.30)	8.16	(0.76)
1380	3.75	(0.35)	9.45	(0.88)
1668	4.55	(0.42)	9.52	(0.88)
16611	4.74	(0.44)	9.88	(0.92)
1680	5.57	(0.52)	11.44	(1.06)
2068	7.51	(0.70)	12.84	(1.19)
20611	7.83	(0.73)	13.32	(1.24)
2080	9.20	(0.85)	15.42	(1.43)
2668	10.48	(0.97)	16.15	(1.50)
26611	10.92	(1.01)	16.76	(1.56)
2680	12.84	(1.19)	19.40	(1.80)
3068	13.45	(1.25)	19.46	(1.81)
30611	14.02	(1.30)	20.20	(1.88)
3080	16.47	(1.53)	23.38	(2.17)
4068	19.39	(1.80)	26.09	(2.42)
40611	20.21	(1.88)	27.07	(2.51)
4080	23.74	(2.21)	31.34	(2.91)

- Dimensions in parentheses are in square meters.

Patio Door Transom Area Specifications

Transom Number	Glass Area Sq. Ft./(m²)		Overall Window Area Sq. Ft./(m²)	
1313	0.27	(0.03)	1.41	(0.13)
1316	0.40	(0.04)	1.71	(0.16)
1320	0.65	(0.06)	2.30	(0.21)
1613	0.40	(0.04)	1.71	(0.16)
1616	0.59	(0.05)	2.07	(0.19)
1620	0.97	(0.09)	2.79	(0.26)
2013	0.65	(0.06)	2.30	(0.21)
2016	0.97	(0.09)	2.79	(0.26)
2020	1.61	(0.15)	3.75	(0.35)
2613	0.91	(0.09)	2.90	(0.27)
2616	1.35	(0.13)	3.50	(0.33)
2620	2.24	(0.21)	4.72	(0.44)
3013	1.17	(0.11)	3.49	(0.32)
3016	1.74	(0.16)	4.22	(0.39)
3020	2.87	(0.27)	5.69	(0.53)
4013	1.69	(0.16)	4.68	(0.43)
4016	2.50	(0.23)	5.66	(0.53)
4020	4.13	(0.39)	7.63	(0.71)

Transom Number	Glass Area Sq. Ft./(m²)		Overall Window Area Sq. Ft./(m²)	
5013	2.20	(0.20)	5.86	(0.55)
5016	3.27	(0.30)	7.10	(0.66)
5020	5.40	(0.50)	9.57	(0.89)
6013	2.72	(0.25)	7.05	(0.66)
6016	4.03	(0.38)	8.54	(0.79)
6020	6.67	(0.62)	11.50	(1.07)
8013	3.75	(0.35)	9.43	(0.88)
8016	5.56	(0.52)	11.41	(1.06)
8020	9.20	(0.85)	15.38	(1.43)

- Dimensions in parentheses are in square meters.

Patio Door Sidelight and Transom Details

Scale 1 1/2" (38) = 1'-0" (305) – 1:8

1 3/8" flange setback

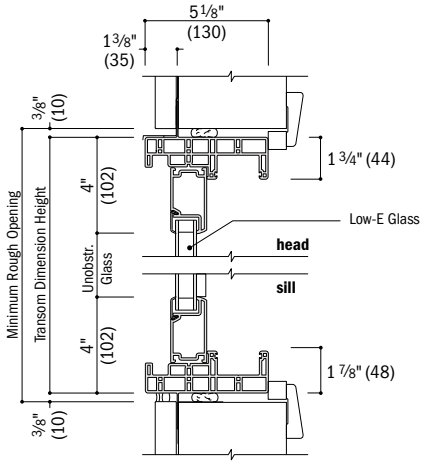

Vertical Section
Patio Door Transom

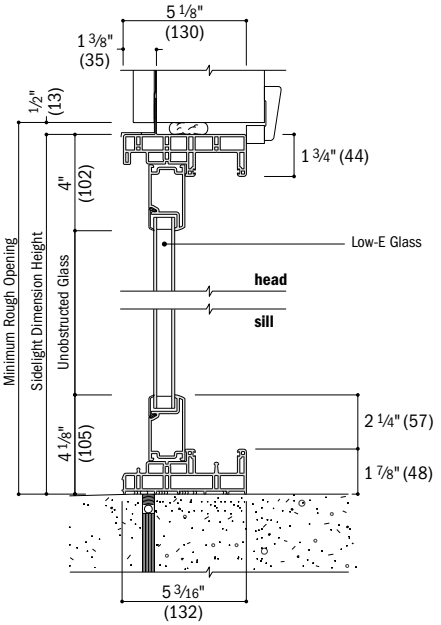

Vertical Section
Patio Door Sidelight

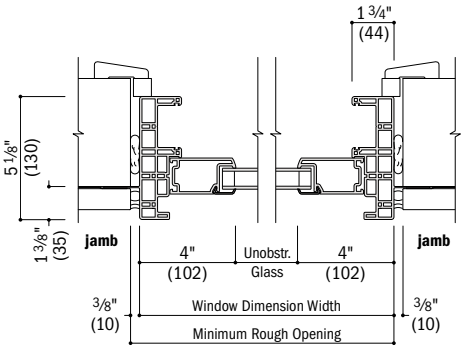

Horizontal Section
Patio Door Sidelight/Transom

1" flange setback with stucco key

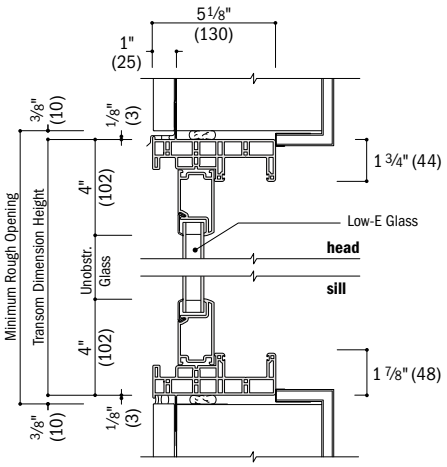

Vertical Section
Patio Door Transom – Stucco Exterior

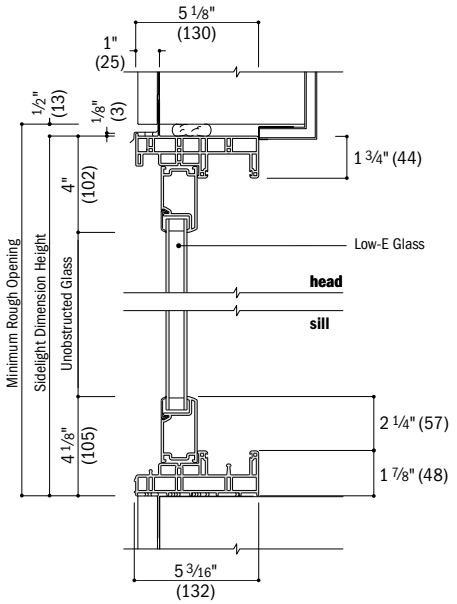

Vertical Section
Patio Door Sidelight – Stucco Exterior

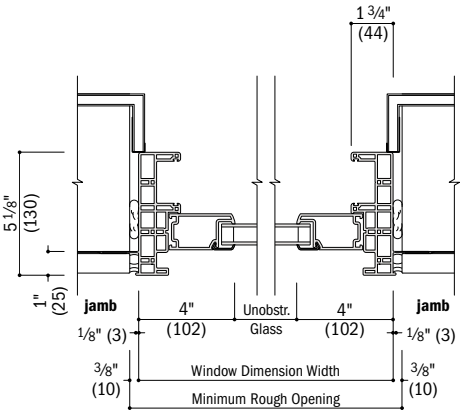

Horizontal Section
Patio Door Sidelight/Transom – Stucco Exterior

See page 97 for joining details.

- Drip cap is required to complete sidelight and transom installation as shown, but may not be included with the sidelight and transom. Use of drip cap is recommended for proper installation.
- **Minimum rough openings may need to be increased to allow for use of building wraps, flashing, sill panning, brackets, fasteners or other items. See installation information on page 110.**
- Details are for illustration only and are not intended to represent product installation methods or materials. Refer to product installation instructions at andersenwindows.com.
- Dimensions in parentheses are in millimeters.

Vertical (ribbon) Joining Details

Scale 1½" (38) = 1'-0" (305) – 1:8

Overall Door-Sidelight or Sidelight-Sidelight Dimension Width – Sum of individual door-sidelight or sidelight-sidelight widths plus ¾" (19).

Overall Minimum Rough Opening Width – Overall dimension width plus ¾" (19).

The addition of joining materials will affect the overall rough opening dimension. See page 110.

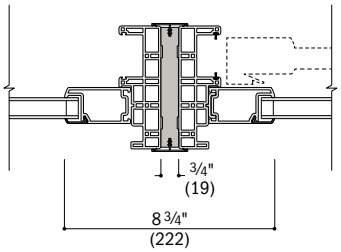

Patio Door Sidelight to Gliding Patio Door
(Patio Door Stationary Jamb)

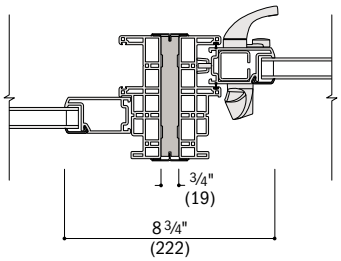

Patio Door Sidelight to Gliding Patio Door
(Patio Door Operating Jamb)

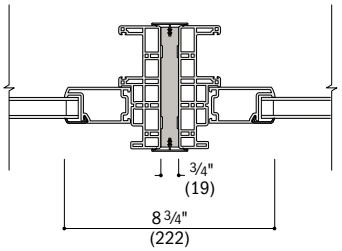

Patio Door Sidelight to Patio Door Sidelight

Overall Sidelight-Door-Sidelight Dimension Width – Sum of individual sidelight-door-sidelight widths plus 1½" (38).

Overall Minimum Rough Opening Width – Overall dimension width plus ¾" (19).

The addition of joining materials will affect the overall rough opening dimension. See page 110.

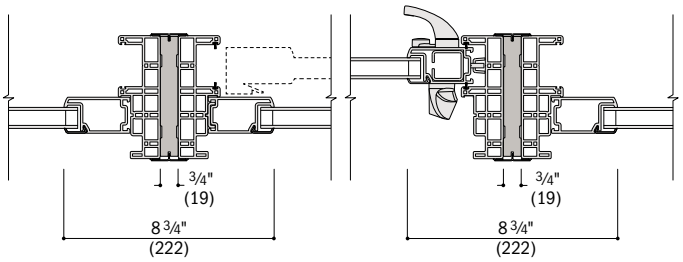

Patio Door Sidelight to Gliding Patio Door to Patio Door Sidelight
(Patio Door Stationary Jamb – Patio Door Operating Jamb)

Horizontal (stack) Joining Details

Scale 1½" (38) = 1'-0" (305) – 1:8

Overall Transom/Door or Transom/Sidelight Dimension Height – Sum of individual transom/door or transom/sidelight heights plus ¾" (19).

Overall Minimum Rough Opening Height – Overall dimension height plus ½" (13).

The addition of joining materials will affect the overall rough opening dimension. See page 110.

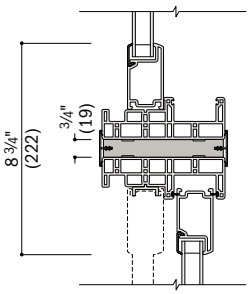

Patio Door Transom Over Gliding Patio Door

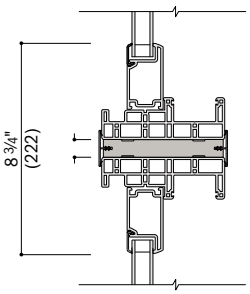

Patio Door Transom Over Patio Door Sidelight

For more information on joining, refer to the combination designs section starting on page 99.

- **Minimum rough openings may need to be increased to allow for use of building wraps, flashing, sill panning, brackets, fasteners or other items. See installation information on page 110.**
- Details are for illustration only and are not intended to represent product installation methods or materials. Refer to product installation instructions at andersenwindows.com.
- Structural performance of any combination is only as high as the lowest structural performance of any individual unit or join in the combination.
- Contact your Andersen supplier for information on meeting wind load requirements for patio door joined combinations.

PATIO DOOR CUSTOM SIZES

Custom Sizes and Specification Formulas

100 Series custom-size patio doors and patio door sidelights and transoms are available in 1/8" (3) increments between minimum and maximum widths and heights shown. Some restrictions apply.

To meet or exceed a clear opening width of 32" (813), select a custom-size door width that requires a rough opening width of 6'-6" (1981) or greater.

Gliding Patio Doors

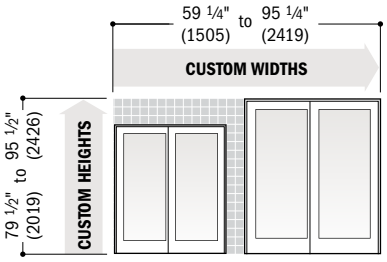

Clear Opening	**Width** = (door width ÷ 2) − 6.125" (156) **Height** = door height − 3.625" (92)	**Minimum R.O.**	**Width** = door width + 3/4" (19) **Height** = door height + 1/2" (13)	**Unobst. Glass**	**Single-Panel** **Width** = (door width ÷ 2) − 5.500" (140) **Two-Panel** **Width** = door width − 11.000" (279) **Height** = door height − 8.250" (210)

Patio Door Sidelights

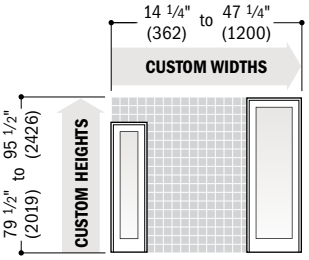

Minimum R.O.	**Width** = sidelight width + 3/4" (19) **Height** = sidelight height + 1/2" (13)	**Unobst. Glass**	**Width** = sidelight width − 8.048" (204) **Height** = sidelight height − 8.048" (204)

Patio Door Transoms

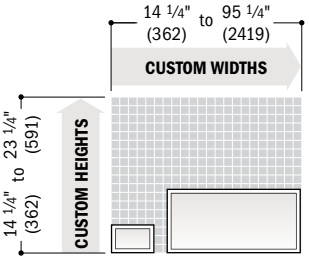

Minimum R.O.	**Width** = transom width + 3/4" (19) **Height** = transom height + 3/4" (19)	**Unobst. Glass**	**Width** = transom width − 8.048" (204) **Height** = transom height − 8.048" (204)

• **Clear Opening** formulas provide dimensions for determining area available for egress. Vent opening, or area available for passage of air, is equal to clear opening. **Minimum R.O.** (minimum rough opening) formulas provide minimum rough opening width and height dimensions. **Unobst. Glass** (unobstructed glass) formulas provide dimensions for determining area available for passage of light.
• Dimensions in parentheses are in millimeters.

Andersen® window and patio doors make it easy to create a wide variety of combination designs

Combination Types

Ribbons are horizontal window combinations (vertical joins) where opposite ends (head and sill) of individual windows are fastened to the building structure. Stacks are vertical window combinations (horizontal joins) where opposite sides (both side jambs) of individual windows are fastened to the building structure. One-way configurations or two-way configurations are used in combination designs.

One-Way

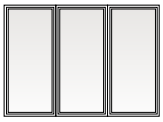

Ribbon Combination

Stack Combination

Two-Way

Multiple Ribbon/Stack Combination

Two-way combinations exist when multiple vertical stacks and horizontal ribbons are joined together. Unlike one-way combinations, the adjacent sides (head and sill, or both side jambs) of individual units are not necessarily fastened directly to the building structure. Two-way combinations are joined with both vertical and horizontal joining material, and may require reinforced joining materials and brackets depending on the local building code requirement for design wind load (measured in pounds per square foot, psf).

Determining Design Wind Load Performance

Proper combination design in conformance with local wind load requirements is vital to the success of your project. To make sure a combination is safe and that it complies with local building codes, the combination design wind load performance capacity must be determined. Correctly determining this performance capacity involves the following three steps:

STEP 1: Determine Building Code Requirement

Make sure you have the proper local codes and have identified specified compliance values. This calculated value (psf) will be used to determine if the combination will be acceptable (STEP 3).

STEP 2: Determine Product Performance

Compare product Design Pressure Rating data to the local building code (psf) requirement. This will show whether the individual units in a combination design are acceptable.

STEP 3: Determine Combination Performance

This step helps determine whether a given product, size, configuration and joining material type will meet the local building code design wind load requirement. To determine what joining material type to use (non-reinforced or reinforced), compare the local building code design wind load requirement to the design wind load table value for a particular joining material on the following pages.

For a successful installation, designed to provide the required design pressure, it is important that Andersen joining materials and installation accessories be specified by a project architect or contractor. Andersen joining materials create a joining system that maintains the look of Andersen® products without sacrificing performance. Check with your Andersen supplier for more information.

The addition of joining materials will affect the overall rough opening dimension. See page 110. **Instruction guides are available at andersenwindows.com. Read and follow instruction guides in their entirety.**

Andersen Trim and End Caps – Interior trim is included with each joining kit for finishing the join on the interior. Exterior trim strip and trim strip end caps are included with each kit for finishing the exterior join.

Materials vary depending on type of units being joined and wind load requirements. Non-reinforced joining materials are used to create alignment and positive joining between windows. Joining materials are not connected to the rough opening structure.

Reinforced joining materials are used to create product alignment, positive joining and load transfer between the Andersen windows and doors and the rough opening. They provide added strength capable of withstanding a variety of wind load pressures. The structural performance of any combination is only as high as the lowest structural performance rating of any individual window or joining material in the combination.

Please contact your Andersen supplier for specific performance and product recommendations.

1-Way Non-Reinforced Fiberglass Joining

100 Series Windows: Picture to Picture, Casement to Casement, Awning to Awning, Casement to Picture, Awning to Picture

Applicable for flanged or flangeless installations into wood, metal, concrete or masonry.

Average Adjacent Window Dimension							
(A + B) ÷ 2 = **6'-0"** (1829)	50	50	43	37	32	29	26
(A + B) ÷ 2 = **5'-6"** (1676)	50	50	44	38	33	30	27
(A + B) ÷ 2 = **5'-0"** (1524)	50	50	45	39	35	31	28
(A + B) ÷ 2 = **4'-6"** (1372)	50	50	46	41	36	33	30
(A + B) ÷ 2 = **4'-0"** (1219)	50	50	49	43	39	35	32
(A + B) ÷ 2 = **3'-6"** (1067)	50	50	50	47	42	39	36
(A + B) ÷ 2 = **3'-0"** (914)	50	50	50	50	47	43	40
(A + B) ÷ 2 = **2'-6"** (762)	50	50	50	50	50	50	46
(A + B) ÷ 2 = **2'-0"** (610)	50	50	50	50	50	50	50
C = (length of join)	**5'-0"** (1524)	**5'-6"** (1676)	**6'-0"** (1829)	**6'-6"** (1981)	**7'-0"** (2134)	**7'-6"** (2286)	**8'-0"** (2438)

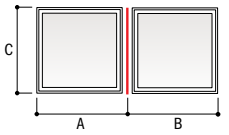

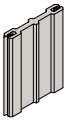

½" (13) x 3 ¼" (83)
Fiberglass Joining Material

1-Way Non-Reinforced Fiberglass Joining

100 Series Windows: Single-Hung to Picture, Gliding to Picture

Applicable for flanged or flangeless installations into wood, metal, concrete or masonry.

Avg. Adjacent Window Dim.							
(A + B) ÷ 2 = **5'-0"** (1524)	50	50	45	39	35	31	28
(A + B) ÷ 2 = **4'-6"** (1372)	50	50	46	41	36	33	30
(A + B) ÷ 2 = **4'-0"** (1219)	50	50	49	43	39	35	32
(A + B) ÷ 2 = **3'-6"** (1067)	50	50	50	47	42	39	36
(A + B) ÷ 2 = **3'-0"** (914)	50	50	50	50	47	43	40
(A + B) ÷ 2 = **2'-6"** (762)	50	50	50	50	50	50	46
(A + B) ÷ 2 = **2'-0"** (610)	50	50	50	50	50	50	50
C = (length of join)	**5'-0"** (1524)	**5'-6"** (1676)	**6'-0"** (1829)	**6'-6"** (1981)	**7'-0"** (2134)	**7'-6"** (2286)	**8'-0"** (2438)

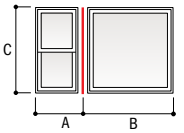

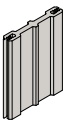

½" (13) x 3 ¼" (83)
Fiberglass Joining Material

1-Way Non-Reinforced Fiberglass Joining

100 Series Windows: Single-Hung to Single-Hung, Gliding to Gliding, Single-Hung to Casement, Single-Hung to Awning

Applicable for flanged or flangeless installations into wood, metal, concrete or masonry.

Avg. Adj. Window Dim.							
(A + B) ÷ 2 = **4'-0"** (1219)	50	50	49	43	39	34	30
(A + B) ÷ 2 = **3'-6"** (1067)	50	50	50	47	42	38	33
(A + B) ÷ 2 = **3'-0"** (914)	50	50	50	50	47	43	38
(A + B) ÷ 2 = **2'-6"** (762)	50	50	50	50	50	50	45
(A + B) ÷ 2 = **2'-0"** (610)	50	50	50	50	50	50	50
C = (length of join)	**5'-0"** (1524)	**5'-6"** (1676)	**6'-0"** (1829)	**6'-6"** (1981)	**7'-0"** (2134)	**7'-6"** (2286)	**8'-0"** (2438)

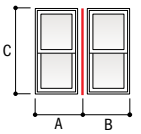

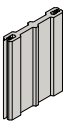

½" (13) x 3 ¼" (83)
Fiberglass Joining Material

- Numerical values in charts represent structural pressure only.
- Structural performance of any combination is only as high as the lowest structural performance of any individual unit or joining material in the combination.
- Andersen® products must be installed and anchored properly according to joining and installation guides to meet rated structural performance. Refer to product joining and installation guides at andersenwindows.com.
- Single transom windows use "picture" frame type. Integral transom windows use "single-hung" frame type. Combination performance should be determined accordingly.
- Dimensions in parentheses are in millimeters.

1-Way Reinforced Fiberglass Joining

100 Series Windows: Casement, Awning, Picture, Single-Hung, Gliding

Applicable for flanged or flangeless installations into wood, metal, concrete or masonry.

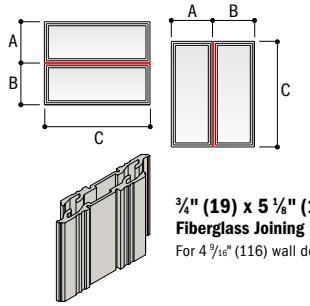

¾" (19) x 5 ⅛" (130)
Fiberglass Joining Material
For 4 9/16" (116) wall depths.

Average Adjacent Window Dimension	C = (length of join)	2'-0" (610)	2'-6" (762)	3'-0" (914)	3'-6" (1067)	4'-0" (1219)	4'-6" (1372)	5'-0" (1524)	5'-6" (1676)	6'-0" (1829)	6'-6" (1981)	7'-0" (2134)	7'-6" (2286)	8'-0" (2438)	8'-6" (2591)	9'-0" (2743)	9'-6" (2896)	10'-0" (3048)	10'-6" (3200)	11'-0" (3353)	11'-6" (3505)	12'-0" (3658)
(A + B) ÷ 2 = **8'-0"** (2438)		50	50	50	50	50	50	50	50	50	50	50										
(A + B) ÷ 2 = **7'-6"** (2286)		50	50	50	50	50	50	50	50	50	50	50										
(A + B) ÷ 2 = **7'-0"** (2134)		50	50	50	50	50	50	50	50	50	50	50										
(A + B) ÷ 2 = **6'-6"** (1981)		50	50	50	50	50	50	50	50	50	50	50										
(A + B) ÷ 2 = **6'-0"** (1829)		50	50	50	50	50	50	50	50	50	50	50	50	50								
(A + B) ÷ 2 = **5'-6"** (1676)		50	50	50	50	50	50	50	50	50	50	50	50	50								
(A + B) ÷ 2 = **5'-0"** (1524)		50	50	50	50	50	50	50	50	50	50	50	50	50								
(A + B) ÷ 2 = **4'-6"** (1372)		50	50	50	50	50	50	50	50	50	50	50	50	50								
(A + B) ÷ 2 = **4'-0"** (1219)		50	50	50	50	50	50	50	50	50	50	50	50	50	50	50	50	50	37	35	28	27
(A + B) ÷ 2 = **3'-9"** (1372)		50	50	50	50	50	50	50	50	50	50	50	50	50	50	50	50	50	42	40	30	28
(A + B) ÷ 2 = **3'-6"** (1067)		50	50	50	50	50	50	50	50	50	50	50	50	50	50	50	50	50	44	42	32	30
(A + B) ÷ 2 = **3'-0"** (914)		50	50	50	50	50	50	50	50	50	50	50	50	50	50	50	50	50	50	48	36	34
(A + B) ÷ 2 = **2'-6"** (762)		50	50	50	50	50	50	50	50	50	50	50	50	50	50	50	50	50	50	50	42	40
(A + B) ÷ 2 = **2'-0"** (610)		50	50	50	50	50	50	50	50	50	50	50	50	50	50	50	50	50	50	50	50	50
(A + B) ÷ 2 = **1'-6"** (457)		50	50	50	50	50	50	50	50	50	50	50	50	50	50	50	50	50	50	50	50	50

2-Way Reinforced Fiberglass Joining*

100 Series Windows: Casement, Awning, Picture, Single-Hung, Gliding

Applicable for flanged or flangeless installations into wood, metal, concrete or masonry.

Average Adjacent Window Dimension	C = (length of join)	2'-0" (610)	2'-6" (762)	3'-0" (914)	3'-6" (1067)	4'-0" (1219)	4'-6" (1372)	5'-0" (1524)	5'-6" (1676)	6'-0" (1829)	6'-6" (1981)	7'-0" (2134)	7'-6" (2286)	8'-0" (2438)	8'-6" (2591)	9'-0" (2743)	9'-6" (2896)	10'-0" (3048)	10'-6" (3200)	11'-0" (3353)	11'-6" (3505)	12'-0" (3658)
(A + B) ÷ 2 = **6'-0"** (1829)		50	50	50	50	50	50	50	50	50	50	50	50	50	50	49	44	40	26	23	21	20
(A + B) ÷ 2 = **5'-6"** (1676)		50	50	50	50	50	50	50	50	50	50	50	50	50	50	50	48	43	28	26	23	21
(A + B) ÷ 2 = **5'-0"** (1524)		50	50	50	50	50	50	50	50	50	50	50	50	50	50	50	50	48	32	30	26	24
(A + B) ÷ 2 = **4'-6"** (1372)		50	50	50	50	50	50	50	50	50	50	50	50	50	50	50	50	50	36	33	27	25
(A + B) ÷ 2 = **4'-0"** (1219)		50	50	50	50	50	50	50	50	50	50	50	50	50	50	50	50	50	41	37	30	28
(A + B) ÷ 2 = **3'-9"** (1372)		50	50	50	50	50	50	50	50	50	50	50	50	50	50	50	50	50	43	40	32	30
(A + B) ÷ 2 = **3'-6"** (1067)		50	50	50	50	50	50	50	50	50	50	50	50	50	50	50	50	50	47	42	35	32
(A + B) ÷ 2 = **3'-0"** (914)		50	50	50	50	50	50	50	50	50	50	50	50	50	50	50	50	50	50	50	40	37
(A + B) ÷ 2 = **2'-6"** (762)		50	50	50	50	50	50	50	50	50	50	50	50	50	50	50	50	50	50	50	43	40
(A + B) ÷ 2 = **2'-0"** (610)		50	50	50	50	50	50	50	50	50	50	50	50	50	50	50	50	50	50	50	50	50
(A + B) ÷ 2 = **1'-6"** (457)		50	50	50	50	50	50	50	50	50	50	50	50	50	50	50	50	50	50	50	50	50

Red lines represent reinforced joins.
Blue lines represent non-reinforced joins.

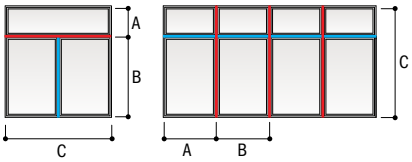

¾" (19) x 5 ⅛" (130)
Fiberglass Joining Material
For 4 9/16" (116) wall depths.

1-Way LVL Joining

100 Series Patio Doors: Gliding Patio Doors, Patio Door Sidelights and Transoms

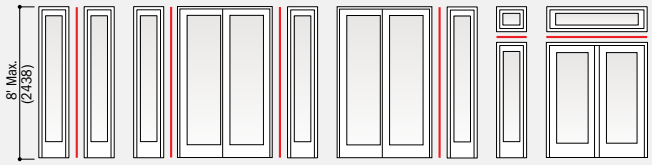

Maximum design pressure 30 psf

Field joining only.

- Numerical values in charts represent structural pressure only.
- Structural performance of any combination is only as high as the lowest structural performance of any individual unit or joining material in the combination.
- Andersen® products must be installed and anchored properly according to joining and installation guides to meet rated structural performance. Refer to product joining and installation guides at andersenwindows.com.
- Single transom windows use "picture" frame type. Integral transom windows use "single-hung" frame type. Combination performance should be determined accordingly.
- Performance of 2-way combinations may be limited by non-reinforced joins 6' (1829) or greater in length. Verify performance of non-reinforced joins within 2-way combinations using the appropriate non-reinforced joining table.

*All 2-way joining requires both non-reinforced and reinforced elements. Intersecting reinforced or non-reinforced joints are not available.

- Dimensions in parentheses are in millimeters.

Andersen® 100 Series Window and Patio Door Altitude Limits

The chart below gives the altitude limit in feet for 100 Series products in this catalog. If the installation of a given product is at an altitude greater than that shown in this chart, a capillary breather tube must be ordered. Be aware that the use of a capillary breather tube eliminates argon gas blend fill and will result in a slightly lower thermal performance (approximately 0.02 increase in window U-Factor). For NFRC certified total unit performance on units with capillary breather tubes for higher altitude applications, please visit **andersenwindows.com/nfrc**.

The use of dual-pane insulating glass without capillary breather tubes at altitudes higher than its rating will result in severe glass distortion, increased glass breakage potential and a risk for seal failure.

Smaller windows are most affected by altitude changes. An increase in altitude results in a decrease in atmospheric pressure. A sealed insulating glass unit attempts to combat this change by increasing its volume to reduce its pressure. One way to increase its volume is by glass deflection. A smaller window is stiffer and does not deflect as much as a larger window; therefore, it cannot relieve the pressure as readily. Thus, the load applied to the glass is greater, resulting in a greater risk for breakage. Another way the window tries to increase its volume is by increasing the edge area; i.e., the seal area. The increased pressure applied to the edge seal load for a smaller window is therefore greater, increasing the chance for seal failure.

Andersen® Product	3,000			4,000			5,000		6,000		7,000		8,000	9,000		10,000		
100 Series Casement Windows				1620	1650		2020	2050	2660		2626	2656	3056	3030				
				1626	1656		2026	2056			2630	3026	3060	3036				
				1630	1660		2030	2060			2636			3040				
				1636			2036	2620			2640			3046				
				1640			2040	3020			2646			3050				
				1646			2046				2650							
100 Series Awning Windows				1616	2016	4016	2020	3020			2626	4026		3030				
				1620	2616		2026	3620			2630			3630				
				1626	3016		2030	4020			3026			4030				
				1630	3616		2620				3626							
100 Series Single-Hung Windows	1620			1626	1666	3030	2036	2076	2640		2646	3646	3050	3056		3660		
	2020			1630	1670	3626	2040	2636	3040		2650	4046	3650	3060		3666		
	2620			1636	1676	3630	2046	3036	3640		2656		4050	3066		3670		
	3020			1640	2026	4026	2050	3636	4040		2660			3070		3676		
	3620			1646	2030	4030	2056	4036			2666			3076		4060		
	4020			1650	2626		2060				2670			3656		4066		
				1656	2630		2066				2676			4056		4070		
				1660	3026		2070				3046					4076		
100 Series Gliding Windows – Active-Stationary or Stationary-Active	2010	2056	4016	2620	3020	3620	3626	4626	4030		4630	5630	5036	5636		6040		
	2016	2060	4610	2626	3026	4020	3630	5026	4036		4636	6030	5040	5640		6046		
	2020	2610	4616	2630	3030	4620	3636	5626	4040		4640		5046	5646				
	2026	2616	5010	2636	3036	5020	3640	6026	4046		4646		5050	5650				
	2030	3010	5016	2640	3040	5620	3646		4050		4650		5056	6036				
	2036	3016	5610	2646	3046	6020	3650		4056		4656		5656	6050				
	2040	3610	5616	2650	3050		3656		4060		4660		5660	6056				
	2046	3616	6010	2656	3056		3660				5030			6060				
	2050	4010	6016	2660	3060		4026				5060							
100 Series Gliding Windows – Active-Stationary-Active				5016	6020		6036	8020	7040	8040	7640	8636	8646	9050	12056	10056		
				5020	6026		6040	8620	7046		7646	8640	8650	9056	12060	11060		
				5026	6030		6046	9020	7050		7650	9026	8656	9060		12036		
				5030	7016		6050	10020	7056		7656	9030	8660	10060		12040		
				5036	7616		6056	11020	7060		7660	9036	10030	11030		12046		
				5040	8016		6060	12020	7626		8046	9040	10036	11036				
				5046	8616		7020		7630		8050	9046	10040	11040				
				5050	9016		7026		7636		8056	10026	10046	11046				
				5056	10016		7030		8026		8060	11026	10050	11050				
				5060	11016		7036		8030		8626	12026	11056	12030				
				6016	12016		7620		8036		8630			12050				
100 Series Picture, Transom and Specialty Windows	1010	5610		1616	2060	7016	2626				3030			3636		4040	5066	6646
	1016	6010		1620	2066	7020	2630				3036			3640		4046	5070	6650
	1020	6610		1626	2070	7616	2636				3040			3646		4050	5076	6656
	1026	7010		1630	2076	7620	2640				3046			3650		4056	5080	6660
	1030	7610		1636	2080	8016	2646				3050			3656		4060	5640	7040
	1036	8010		1640	2616	8020	2650				3056			3660		4066	5646	7046
	1040			1646	2620		2656				3060			3666		4070	5650	7050
	1046			1650	3016		2660				3066			3670		4076	5656	7056
	1050			1656	3020		2666				3070			3676		4080	5660	7060
	1056			1660	3616		2670				3076			3680		4640	5666	7640
	1060			1666	3620		2676				3080			4036		4646	5670	7646
	1066			1670	4016		2680				3630			4636		4650	5676	7650
	1070			1676	4020		3026				4030			5036		4656	5680	7656
	1076			1680	4616		3626				4630			5636		4660	6040	7660
	1080			2016	4620		4026				5030			6036		4666	6046	8040
	1610			2020	5016		4626				5630			6636		4670	6050	8046
	2010			2026	5020		5026				6030			7036		4676	6055	8050
	2610			2030	5616		5626				6630			7636		4680	6060	8056
	3010			2036	5620		6026				7030			8036		5040	6066	8060
	3610			2040	6016		6626				7630					5046	6070	
	4010			2046	6020		7026				8030					5050	6076	
	4610			2050	6616		7626									5056	6080	
	5010			2056	6620		8026									5060	6640	
100 Series Gliding Patio Doors																5068	6068	8068
																50611	60611	80611
																5080	6080	8080
100 Series Patio Door Sidelights	1368			1668									2068			2668	3068	4068
	13611			16611									20611			26611	30611	40611
	1380			1680									2080			2680	3080	4080
100 Series Patio Door Transoms	1313	2016	5013	2020														
	1316	2613	5016	2620														
	1320	2616	6013	3020														
	1613	3013	6016	4020														
	1616	3016	8013	5020														
	1620	4013	8016	6020														
	2013	4016		8020														

- Deflection of glass will occur on units with larger glass areas.
- Altitude limits for patio doors shown in two-panel configurations. These limits also qualify for same size panels used in single panel configurations.
- **Contact your Andersen supplier for altitude limits for custom-sized windows and doors.**
- For NFRC ratings of units with capillary breather tubes, visit andersenwindows.com.

PERFORMANCE STANDARDS

The Window and Door Manufacturers Association (WDMA), the American Architectural Manufacturers Association (AAMA) and the Canadian Standards Association (CSA) jointly release the North American Fenestration Standard/Specification for Windows, Doors and Skylights (NAFS-11) where "-11" refers to the most recent publication year of 2011. NAFS is also referred to as AAMA/WDMA/CSA 101/I.S.2/A440, which is how the International Code Council (ICC) lists this standard in the 2012, 2015 and 2018 International Residential Code (IRC) and International Building Code (IBC) as the means to indicate the window, door or skylights design pressure rating used to determine compliance to the job site design pressure requirements.

A product only achieves a "Performance Grade" or "PG" rating when it complies with all of the NAFS performance requirements such as ease of operation, air infiltration resistance, resistance to water penetration and resistance to forced entry, etc. A "Design Pressure Rating" or "DP" rating only depicts the design and structural load performance.

Performance Classes

The NAFS Standard/Specification defines requirements for four performance classes. Performance classes are designated R, LC, CW and AW. This classification system provides for several levels of performance. Product selection is always based on the performance and building code requirements of the particular project.

Elements of Performance Grade (PG) Designations

In order to qualify for a given performance grade (PG), test specimens need to pass all required performance tests for the following, in addition to all required auxiliary (durability) and applicable material/component tests (not shown here) for the applicable product type and desired performance class:

(a) Operating force (if applicable): Maximum operating force varies by product type and performance class.

(b) Air leakage resistance: Tested in accordance with ASTM E283 at a test pressure of 1.57 psf. Allowable air infiltration for R, LC and CW class designations is 0.3 cubic feet per minute per square foot of frame (cfm/ft^2).

(c) Water penetration resistance: Tested in accordance with ASTM E547 with the specified test pressure applied per NAFS-11. Test consists of four cycles. Each cycle consists of five minutes with pressure applied and one minute with the pressure released, during which the water spray is continuously applied. Water spray shall be uniformly applied at a constant rate of 5 U.S. gal/ft^2 · hr.

(d) Uniform load deflection test: Tested in accordance with ASTM E330 for both positive and negative pressure (pressure defined by NAFS-11) with the load maintained for a period of 10 seconds. The test specimen shall be evaluated for deflection during each load for permanent damage after each load and for any effects on the normal operation of the specimen. *Starting with the 2008 version of NAFS, design pressure (DP) will only represent the "uniform load deflection test."*

(e) Uniform load structural test: Tested in accordance with ASTM E330 for both positive and negative pressure (pressure defined by NAFS-11) with the load maintained for a period of 10 seconds. After loads are removed, there shall be no permanent deformation in excess of 0.4% of its span and no damage to the unit, which would make it inoperable.

(f) Forced-entry resistance (if applicable): Tested in accordance with ASTM F588 (windows), F476 (swinging doors) and F842 (sliding doors) at a performance level 10 rating.

Performance Grades (PG) and Corresponding Test Pressures (psf)

Performance Class/ Performance Grade		Air Infiltration Test Pressure		Maximum Allowable Air Infiltration/ Exfiltration Rate		Water Penetration Resistance Test Pressure		Design Pressure		Structural Test Pressure	
R	LC	Pa	psf	L/s·m^2	cfm/ft^2	Pa	psf	Pa	psf	Pa	psf
15	-	75	1.57	1.5	0.30	140	2.92	720	15.04	1080	22.56
20	-	75	1.57	1.5	0.30	150	3.13	960	20.05	1440	30.08
25	25	75	1.57	1.5	0.30	180	3.76	1200	25.06	1800	37.59
30	30	75	1.57	1.5	0.30	220	4.59	1440	30.08	2160	45.11
35	35	75	1.57	1.5	0.30	260	5.43	1680	35.09	2520	52.63
40	40	75	1.57	1.5	0.30	290	6.06	1920	40.10	2880	60.15
45	45	75	1.57	1.5	0.30	330	6.89	2160	45.11	3240	67.67
50	50	75	1.57	1.5	0.30	360	7.52	2400	50.13	3600	75.19
55	55	75	1.57	1.5	0.30	400	8.35	2640	55.14	3960	82.71
60	60	75	1.57	1.5	0.30	440	9.19	2880	60.15	4320	90.23
65	65	75	1.57	1.5	0.30	470	9.82	3120	65.16	4680	97.74
70	70	75	1.57	1.5	0.30	510	10.65	3360	70.18	5040	105.26
75	75	75	1.57	1.5	0.30	540	11.28	3600	75.19	5400	112.78
80	80	75	1.57	1.5	0.30	580	12.11	3840	80.20	5760	120.30
85	85	75	1.57	1.5	0.30	580	12.11	4080	85.21	6120	127.82
90	90	75	1.57	1.5	0.30	580	12.11	4320	90.23	6480	135.34
95	95	75	1.57	1.5	0.30	580	12.11	4560	95.24	6840	142.86
100	100	75	1.57	1.5	0.30	580	12.11	4800	100.25	7200	150.38

HALLMARK CERTIFICATION

The Window and Door Manufacturers Association (WDMA)-sponsored Hallmark Certification Program provides manufacturers with certification to the AAMA/WDMA/CSA 101/I.S.2/A440-11 Standard and is designed to provide builders, architects, specifiers and consumers with an easily recognizable means of identifying products that have been manufactured and tested in accordance with NAFS (AAMA/WDMA/CSA 101/I.S.2/A440) industry standards and other applicable performance standards. Conformance is determined by periodic in-plant inspections by a third-party administrator. Inspections include auditing licensee quality control procedures and processes, and a review to confirm products are manufactured in accordance with the appropriate performance standards. Periodic testing of representative product constructions and components by an independent testing laboratory is also required. When all of the program requirements are met, the licensee is authorized to use the WDMA Hallmark registered logo on their certification label as a means of identifying products and their performance ratings.

Products successfully obtaining Hallmark Certification will be labeled with a three-part code, which includes performance class, performance grade and size tested. In addition to this mandatory requirement, you are allowed to list the design pressure on a separate line.

WINDOW & DOOR MANUFACTURERS ASSOCIATION WDMA Hallmark Certified www.wdma.com	Andersen Corporation 100 SERIES CASEMENT WINDOW Manufacturer stipulates certification as indicated below.
STANDARD	RATING
AAMA/WDMA/CSA 101/I.S.2/A440-11	Class LC(1) – PG40(2) – Size Tested 71.5 x 71.5 in.(3) DP+40/-45(4)
AAMA/WDMA/CSA 101/I.S.2/A440-08	Class LC(1) – PG40(2) – Size Tested 71.5 x 71.5 in.(3) DP+40/-45(4)

(1) – Performance Class

(2) – Performance Grade

(3) – Size Tested

(4) – Design Pressure

In the example above, the performance class is LC, the performance grade (PG) is 40 pounds per square foot (psf) and the size tested is 71.5" x 71.5". What this means to the specifier is, based on the performance grade chart, the laboratory-tested air infiltration was less than 0.3 cfm/ft^2 (test pressure is always 1.57 psf and the allowable airflow is 0.3 cfm/ft^2), the product tested successfully resisted a laboratory water penetration test at a test pressure of 6.0 psf, the product tested successfully withstood a laboratory positive test pressure of 60 psf and a laboratory negative test pressure of 67 psf, and the product tested passed the laboratory requirements for operational force and forced-entry resistance. Based on this test, all products of the same design that are smaller than the tested size can be labeled with this product performance rating.

IMPORTANT

Building codes prescribe design pressure based on a variety of criteria (i.e., windspeed zone, building height, building type, job site exposure, etc.). Design pressures derived from Performance Grade (PG) test requirements should be used to determine compliance to building code required design pressures. Structural test pressures, which are tested at 1.5 times the design pressure, should **not** be used for determining design pressure code compliance. In the example above, a PG 40 performance grade rating, which passes a 40 psf design pressure, should be used for determining code compliance, not the structural test pressure of 60 psf.

If you need further details about how Andersen® products perform to this standard, contact your Andersen supplier.

If you need further information about the AAMA/WDMA/CSA 101/I.S.2/A440-11 standard or the Hallmark Certification Program, please contact: WDMA, 2001 K Street NW, 3rd Floor North, Washington, D.C. 20006. Phone: 202-367-1157 Website: **wdma.com**

Where designated, Andersen products are tested, certified and labeled to the requirements of the Hallmark Certification Program. Actual performance may vary based on variations in manufacturing, shipping, installation, environmental conditions and conditions of use.

Performance Grade, Sound Transmission and Air Infiltration Ratings — 100 Series Windows and Patio Doors

For current performance information, please visit **andersenwindows.com**.

Andersen® Product	AAMA/WDMA/CSA 101/I.S.2/A440 Performance Grade (PG)	+/- Corresponding Design Pressure (DP)	STANDARD GLASS Sound Transmission Class (STC)	STANDARD GLASS Outdoor/Indoor Transmission Class (OITC)	STC UPGRADE GLASS Sound Transmission Class (STC)	STC UPGRADE GLASS Outdoor/Indoor Transmission Class (OITC)	Air Infiltration CFM/FT^2
Casement Windows							
Single and Twin (venting/stationary)	Class LC-PG40 Size Tested 71.5" x 71.5"	40/45	30	25	33	28	< 0.2
Single and Twin, PG Upgrade (venting/stationary)	Class LC-PG50 Size Tested 71.5" x 71.5"	50/50*	30	25	33	28	< 0.2
Picture With Flanking Casements	Class LC-PG40 Size Tested 143.5" x 71.5"	40/40	-	-	-	-	< 0.2
Picture With Flanking Casements, PG Upgrade	Class LC-PG50 Size Tested 143.5" x 65.5"	50/50*	-	-	-	-	< 0.2
Awning Windows							
Single and Twin (venting/stationary)	Class LC-PG40 Size Tested 47.5" x 95.5"	40/45	30	25	33	28	< 0.2
Single and Twin, PG Upgrade (venting/stationary)	Class LC-PG50 Size Tested 47.5" x 95.5"	50/50*	30	25	33	28	< 0.2
Picture Over Awning	Class LC-PG40 Size Tested 47.5" x 95.5"	40/45	-	-	-	-	< 0.2
Picture Over Awning, PG Upgrade	Class LC-PG50 Size Tested 47.5" x 95.5"	50/50*	-	-	-	-	< 0.2
Single-Hung Windows							
Arch Single-Hung	Class LC-PG30 Size Tested 41.5" x 95.0"	30/30	-	-	-	-	< 0.2
Arch Single-Hung, PG Upgrade	Class LC-PG50 Size Tested 41.5" x 83.0"	50/50*	-	-	-	-	< 0.2
Single-Hung	Class LC-PG30 Size Tested 47.5" x 89.5"	30/30	28	23	32	26	< 0.2
Single-Hung, PG Upgrade	Class LC-PG50 Size Tested 47.5" x 77.5"	50/50*	28	23	32	26	< 0.2
Twin and Triple Single-Hung	Class LC-PG30 Size Tested 143.5" x 71.5"	30/30	-	-	-	-	< 0.2
Twin and Triple Single-Hung, PG Upgrade	Class LC-PG50 Size Tested 143.5" x 65.5"	50/50*	-	-	-	-	< 0.2
Transom Over Single-Hung	Class LC-PG30 Size Tested 47.5" x 95.5"	30/30	-	-	-	-	< 0.2
Transom Over Single-Hung, PG Upgrade	Class LC-PG50 Size Tested 47.5" x 95.5"	50/50*	-	-	-	-	< 0.2
Picture With Flanking Single-Hungs	Class LC-PG30 Size Tested 143.5" x 71.5"	30/30	-	-	-	-	< 0.2
Picture With Flanking Single-Hungs, PG Upgrade	Class LC-PG50 Size Tested 143.5" x 59.5"	50/50*	-	-	-	-	< 0.2
Gliding Windows							
Gliding - Active-Stationary or Stationary-Active	Class LC-PG30 Size Tested 71.5" x 71.5"	30/30	28	23	32	27	< 0.2
Gliding, PG Upgrade - Active-Stationary or Stationary-Active	Class LC-PG50 Size Tested 71.5" x 59.5"	50/50*	28	23	32	27	< 0.2
Picture over Gliding - Active-Stationary or Stationary-Active	Class LC-PG30 Size Tested 59.5" x 83.5"	30/30	-	-	-	-	< 0.2
Gliding - Active-Stationary-Active	Class LC-PG30 Size Tested 143.5" x 71.5"	30/30	-	-	-	-	< 0.2
Gliding, PG Upgrade - Active-Stationary-Active	Class LC-PG50 Size Tested 101.5" x 59.5"	50/50*	-	-	-	-	< 0.2
Picture over Gliding - Active-Stationary-Active	Class LC-PG30 Size Tested 107.5" x 83.5"	30/30	-	-	-	-	< 0.2
Picture, Transom & Specialty Windows							
Picture, Transom and Specialty Windows	Class LC-PG40 Size Tested 95.5" x 84.3"	40/40	29	24	32	27	< 0.2
Picture, Transom and Specialty Windows, PG Upgrade	Class LC-PG50 Size Tested 95.5" x 71.5"	50/50*	29	24	32	27	< 0.2
Gliding Patio Doors	Class LC-PG30 Size Tested 95.3" x 95.5"	30/30	28	23	29	26	< 0.2
Patio Door Sidelights	Class LC-PG30 Size Tested 47.3" x 95.3"	30/30	29	24	31	26	< 0.2
Patio Door Transoms	Class LC-PG30 Size Tested 95.3" x 23.3"	30/30	29	24	31	26	< 0.2

- "Performance Grade (PG)" ratings may vary from tested performance rating for larger or smaller units of a particular type.
- "Sound Transmission Class (STC)" and "Outdoor/Indoor Transmission Class (OITC)" ratings are for individual units with 3 mm glass based on independent tests and represent entire unit.
- This data is accurate as of January 2022. Due to ongoing product changes, updated test results, or new industry standards, this data may change over time.
- Where designated, Andersen products are certified and labeled to the requirements of the Hallmark Certification Program. Actual performance may vary based on variations in manufacturing, shipping, installation, environmental conditions and conditions of use.
- Contact your Andersen supplier for more information.

*Available for select sizes. Contact your Andersen supplier.

Andersen® Products Total Unit Recycled Content Percentages

For current performance information, please visit **andersenwindows.com**.

Andersen Product	% Pre-Consumer Recycled Content
100 Series Windows & Patio Doors	
Casement Window	23%
Awning Window	24%
Single-Hung Window	20%
Gliding Window	21%
Picture Window	18%
Gliding Patio Door	14%
Patio Door Sidelight	18%
Patio Door Transom	21%

- "% Pre-Consumer Recycled Content" is calculated to meet ISO 14021 standards based on NFRC sizing. Actual recycled content dependent on product size.

Center of Glass Performance Data — 100 Series Windows and Patio Doors

For current performance information, please visit **andersenwindows.com**.

Andersen® Product & Glass Type	VT[1]	SC[2]	SHGC[3]	RHG[4]	Fading Tuv[5]	Fading Tdw[6]	%RH @ center[7]	IGST[8]
Low-E Glass								
Casement, Awning, Single-Hung and Gliding Windows	72%	0.48	0.41	98.2	16%	33%	61%	55.7
Picture, Transom and Specialty Windows	72%	0.47	0.41	97.5	16%	33%	60%	55.3
Gliding Patio Doors	72%	0.47	0.41	97.5	16%	33%	60%	55.3
Patio Door Sidelights and Transoms	72%	0.47	0.41	97.5	16%	33%	60%	55.3
Low-E SmartSun™ Glass								
Casement, Awning, Single-Hung and Gliding Windows	65%	0.31	0.27	65.6	5%	21%	62%	56.1
Picture, Transom and Specialty Windows	65%	0.31	0.27	64.9	5%	21%	61%	55.7
Gliding Patio Doors	65%	0.31	0.27	64.9	5%	21%	61%	55.7
Patio Door Sidelights and Transoms	65%	0.31	0.27	64.9	5%	21%	61%	55.7
Low-E Sun Glass								
Casement, Awning, Single-Hung and Gliding Windows	40%	0.29	0.25	61.1	16%	24%	60%	55.4
Picture, Transom and Specialty Windows	40%	0.29	0.25	60.4	16%	24%	59%	55.0
Gliding Patio Doors	40%	0.29	0.25	60.4	16%	24%	59%	55.0
Patio Door Sidelights and Transoms	40%	0.29	0.25	60.4	16%	24%	59%	55.0
Low-E PassiveSun® Glass								
Casement, Awning, Single-Hung and Gliding Windows	79%	0.79	0.69	161.0	29%	42%	60%	55.1
Picture, Transom and Specialty Windows	79%	0.79	0.69	161.0	29%	42%	59%	54.7
Gliding Patio Doors	79%	0.79	0.69	161.0	29%	42%	59%	54.7
Patio Door Sidelights and Transoms	79%	0.79	0.69	161.0	29%	42%	59%	54.7
Clear Dual-Pane Glass								
Casement, Awning, Single-Hung and Gliding Windows	82%	0.89	0.78	186	58%	61%	39%	43.7
Picture, Transom and Specialty Windows	82%	0.89	0.78	186	58%	61%	39%	43.6
Gliding Patio Doors	82%	0.89	0.78	186	58%	61%	39%	43.6
Patio Door Sidelights and Transoms	82%	0.89	0.78	186	58%	61%	39%	43.6

• Based on NFRC testing/simulation conditions using Windows v7.4.6.0 and NFRC validated spectral data. 0°F outside temperature, 70°F inside temperature and a 15 mph wind. 1) Visible Transmittance (VT) measures how much light comes through the glass. The higher the value, from 0 to 1, the more daylight the glass lets in. Visible Transmittance is measured over the 380 to 760 nanometer portion of the solar spectrum. 2) Shading Coefficient (SC) defines the amount of heat gain through the glass compared to a single light of clear 1/8" (3) glass. 3) Solar Heat Gain Coefficient (SHGC) defines the fraction of solar radiation admitted through the glass directly transmitted, as well as absorbed and subsequently released inward. The lower the value, the less heat is transmitted through the product. 4) Relative Heat Gain (RHG) is the amount of heat gain through a glazing incorporating U-Factor and Solar Heat Gain Coefficient. 5) Transmission Ultra-Violet Energy (Tuv). The transmission of short-wave energy in the 300-380 nanometer portion of the solar spectrum. The energy can cause fabric fading. 6) Transmission Damage Function (Tdw). The transmission of UV and visible light energy in the 300-600 nanometer portion of the solar spectrum. The value includes both the UV and visible light energy that can cause fabric fading. This rating has also been referred to as the Krochmann Damage Function. This rating better predicts fading potential than UV transmission alone. The lower the Damage Function rating, the less transmission of short-wave energy through the glass that can potentially cause fabric fading. Fabric type is also a key component of fading potential. 7) Percent relative humidity before condensation occurs at the center of glass, taken using center of glass temperature. 8) Inside glass surface temperatures are taken at the center of glass.

• This data is accurate as of January 2022. Due to ongoing product changes, updated test results or new industry standards, this data may change over time. Contact your Andersen supplier for current performance information or upgrade options.

• Contact your Andersen supplier for center of glass performance data on windows with patterned glass, tempered glass and products ordered with capillary breather tubes.

Andersen® NFRC Certified Total Unit Performance

For current performance information, please visit **andersenwindows.com**.

Refer to notes on page 106 for important information on performance data.

Andersen Product	High-Performance Dual-Pane Glass Type		U-Factor[1]	SHGC[2]	VT[3]
100 Series Casement Windows AND-N-84 2.2 mm glass	Low-E	Without Grilles	0.28	0.28	0.48
		Simulated Divided Light Grilles	0.28	0.25	0.43
		Finelight™ Grilles	0.28	0.25	0.43
		Finelight With Exterior Applied Grilles	0.28	0.25	0.43
		Full Divided Light Grilles	0.29	0.25	0.43
	Low-E w/HeatLock™	Without Grilles	0.24	0.27	0.47
		Simulated Divided Light Grilles	0.24	0.25	0.42
		Finelight Grilles	0.24	0.25	0.42
		Finelight With Exterior Applied Grilles	0.24	0.25	0.42
		Full Divided Light Grilles	0.26	0.25	0.42
	Low-E SmartSun™	Without Grilles	0.27	0.18	0.43
		Simulated Divided Light Grilles	0.27	0.17	0.39
		Finelight Grilles	0.27	0.17	0.39
		Finelight With Exterior Applied Grilles	0.27	0.17	0.39
		Full Divided Light Grilles	0.28	0.17	0.39
	Low-E SmartSun w/HeatLock	Without Grilles	0.24	0.18	0.42
		Simulated Divided Light Grilles	0.24	0.16	0.38
		Finelight Grilles	0.24	0.16	0.38
		Finelight With Exterior Applied Grilles	0.24	0.16	0.38
		Full Divided Light Grilles	0.25	0.16	0.38
	Low-E Sun	Without Grilles	0.28	0.17	0.26
		Simulated Divided Light Grilles	0.28	0.16	0.24
		Finelight Grilles	0.28	0.16	0.24
		Finelight With Exterior Applied Grilles	0.28	0.16	0.24
		Full Divided Light Grilles	0.29	0.16	0.24
	Low-E PassiveSun®	Without Grilles	0.28	0.46	0.53
		Simulated Divided Light Grilles	0.28	0.42	0.47
		Finelight Grilles	0.28	0.42	0.47
		Finelight With Exterior Applied Grilles	0.28	0.42	0.47
		Full Divided Light Grilles	0.29	0.42	0.47
	Clear Dual-Pane	Without Grilles	0.41	0.52	0.55
		Simulated Divided Light Grilles	0.41	0.48	0.49
		Finelight Grilles	0.41	0.48	0.49
		Finelight With Exterior Applied Grilles	0.41	0.48	0.49
		Full Divided Light Grilles	0.42	0.48	0.49

Andersen Product	High-Performance Dual-Pane Glass Type		U-Factor[1]	SHGC[2]	VT[3]
100 Series Awning Windows AND-N-85 2.2 mm glass	Low-E	Without Grilles	0.28	0.28	0.48
		Simulated Divided Light Grilles	0.28	0.25	0.43
		Finelight™ Grilles	0.28	0.25	0.43
		Finelight With Exterior Applied Grilles	0.28	0.25	0.43
		Full Divided Light Grilles	0.29	0.25	0.43
	Low-E w/HeatLock™	Without Grilles	0.25	0.27	0.47
		Simulated Divided Light Grilles	0.25	0.25	0.42
		Finelight Grilles	0.25	0.25	0.42
		Finelight With Exterior Applied Grilles	0.25	0.25	0.42
		Full Divided Light Grilles	0.26	0.25	0.42
	Low-E SmartSun™	Without Grilles	0.27	0.18	0.43
		Simulated Divided Light Grilles	0.27	0.17	0.39
		Finelight Grilles	0.27	0.17	0.39
		Finelight With Exterior Applied Grilles	0.27	0.17	0.39
		Full Divided Light Grilles	0.28	0.17	0.39
	Low-E SmartSun w/HeatLock	Without Grilles	0.24	0.18	0.42
		Simulated Divided Light Grilles	0.24	0.16	0.38
		Finelight Grilles	0.24	0.16	0.38
		Finelight With Exterior Applied Grilles	0.24	0.16	0.38
		Full Divided Light Grilles	0.26	0.16	0.38
	Low-E Sun	Without Grilles	0.28	0.17	0.26
		Simulated Divided Light Grilles	0.28	0.16	0.24
		Finelight Grilles	0.28	0.16	0.24
		Finelight With Exterior Applied Grilles	0.28	0.16	0.24
		Full Divided Light Grilles	0.29	0.16	0.24
	Low-E PassiveSun®	Without Grilles	0.28	0.46	0.53
		Simulated Divided Light Grilles	0.28	0.42	0.47
		Finelight Grilles	0.28	0.42	0.47
		Finelight With Exterior Applied Grilles	0.28	0.42	0.47
		Full Divided Light Grilles	0.29	0.42	0.47
	Clear Dual-Pane	Without Grilles	0.42	0.52	0.55
		Simulated Divided Light Grilles	0.42	0.48	0.49
		Finelight Grilles	0.42	0.48	0.49
		Finelight With Exterior Applied Grilles	0.42	0.48	0.49
		Full Divided Light Grilles	0.42	0.48	0.49

• This data is accurate as of January 2022. Due to ongoing product changes, updated test results, or new industry standards or requirements, this data may change over time.
Ratings are for sizes specified by NFRC for testing and certification. Ratings may vary depending on use of tempered glass, different grille options, glass for high altitudes, etc.

continued on next page

Andersen® NFRC Certified Total Unit Performance *(continued)*

For current performance information, please visit **andersenwindows.com**.

Andersen Product	High-Performance Dual-Pane Glass Type		U-Factor[1]	SHGC[2]	VT[3]
100 Series Single-Hung Windows AND-N-80 2.2 mm glass	Low-E	Without Grilles	0.30	0.31	0.54
		Simulated Divided Light Grilles	0.30	0.28	0.48
		Finelight™ Grilles	0.30	0.28	0.48
		Finelight With Exterior Applied Grilles	0.30	0.28	0.48
		Full Divided Light Grilles	0.31	0.28	0.48
	Low-E w/HeatLock™	Without Grilles	0.26	0.31	0.53
		Simulated Divided Light Grilles	0.26	0.28	0.47
		Finelight Grilles	0.26	0.28	0.47
		Finelight With Exterior Applied Grilles	0.26	0.28	0.47
		Full Divided Light Grilles	0.28	0.28	0.47
	Low-E SmartSun™	Without Grilles	0.29	0.21	0.49
		Simulated Divided Light Grilles	0.29	0.19	0.43
		Finelight Grilles	0.29	0.19	0.43
		Finelight With Exterior Applied Grilles	0.29	0.19	0.43
		Full Divided Light Grilles	0.31	0.19	0.43
	Low-E SmartSun w/HeatLock	Without Grilles	0.25	0.20	0.48
		Simulated Divided Light Grilles	0.25	0.18	0.42
		Finelight Grilles	0.25	0.18	0.42
		Finelight With Exterior Applied Grilles	0.25	0.18	0.42
		Full Divided Light Grilles	0.28	0.18	0.42
	Low-E Sun	Without Grilles	0.30	0.19	0.30
		Simulated Divided Light Grilles	0.30	0.17	0.27
		Finelight Grilles	0.30	0.17	0.27
		Finelight With Exterior Applied Grilles	0.30	0.17	0.27
		Full Divided Light Grilles	0.32	0.17	0.27
	Low-E PassiveSun®	Without Grilles	0.31	0.52	0.60
		Simulated Divided Light Grilles	0.31	0.47	0.53
		Finelight Grilles	0.31	0.47	0.53
		Finelight With Exterior Applied Grilles	0.31	0.47	0.53
		Full Divided Light Grilles	0.32	0.47	0.53
	Clear Dual-Pane	Without Grilles	0.46	0.59	0.62
		Simulated Divided Light Grilles	0.46	0.53	0.55
		Finelight Grilles	0.46	0.53	0.55
		Finelight With Exterior Applied Grilles	0.46	0.53	0.55
		Full Divided Light Grilles	0.47	0.53	0.55
100 Series Gliding Windows AND-N-81 2.2 mm glass	Low-E	Without Grilles	0.30	0.31	0.54
		Simulated Divided Light Grilles	0.30	0.28	0.48
		Finelight™ Grilles	0.30	0.28	0.48
		Finelight With Exterior Applied Grilles	0.30	0.28	0.48
		Full Divided Light Grilles	0.31	0.28	0.48
	Low-E w/HeatLock™	Without Grilles	0.26	0.31	0.53
		Simulated Divided Light Grilles	0.26	0.28	0.47
		Finelight Grilles	0.26	0.28	0.47
		Finelight With Exterior Applied Grilles	0.26	0.28	0.47
		Full Divided Light Grilles	0.28	0.28	0.47
	Low-E SmartSun™	Without Grilles	0.29	0.21	0.49
		Simulated Divided Light Grilles	0.29	0.19	0.43
		Finelight Grilles	0.29	0.19	0.43
		Finelight With Exterior Applied Grilles	0.29	0.19	0.43
		Full Divided Light Grilles	0.31	0.19	0.43
	Low-E SmartSun w/HeatLock	Without Grilles	0.26	0.20	0.48
		Simulated Divided Light Grilles	0.26	0.18	0.42
		Finelight Grilles	0.26	0.18	0.42
		Finelight With Exterior Applied Grilles	0.26	0.18	0.42
		Full Divided Light Grilles	0.28	0.18	0.42
	Low-E Sun	Without Grilles	0.30	0.19	0.30
		Simulated Divided Light Grilles	0.30	0.17	0.27
		Finelight Grilles	0.30	0.17	0.27
		Finelight With Exterior Applied Grilles	0.30	0.17	0.27
		Full Divided Light Grilles	0.32	0.17	0.27
	Low-E PassiveSun®	Without Grilles	0.31	0.52	0.60
		Simulated Divided Light Grilles	0.31	0.47	0.53
		Finelight Grilles	0.31	0.47	0.53
		Finelight With Exterior Applied Grilles	0.31	0.47	0.53
		Full Divided Light Grilles	0.32	0.47	0.53
	Clear Dual-Pane	Without Grilles	0.46	0.59	0.62
		Simulated Divided Light Grilles	0.46	0.53	0.55
		Finelight Grilles	0.46	0.53	0.55
		Finelight With Exterior Applied Grilles	0.46	0.53	0.55
		Full Divided Light Grilles	0.47	0.53	0.55

Andersen Product	High-Performance Dual-Pane Glass Type		U-Factor[1]	SHGC[2]	VT[3]
100 Series Picture and Specialty Windows AND-N-82 3.0 mm glass	Low-E	Without Grilles	0.27	0.32	0.56
		Simulated Divided Light Grilles	0.27	0.29	0.50
		Finelight™ Grilles	0.27	0.29	0.50
		Finelight With Exterior Applied Grilles	0.27	0.29	0.50
		Full Divided Light Grilles	0.29	0.29	0.50
	Low-E w/HeatLock™	Without Grilles	0.23	0.32	0.55
		Simulated Divided Light Grilles	0.23	0.29	0.49
		Finelight Grilles	0.23	0.29	0.49
		Finelight With Exterior Applied Grilles	0.23	0.29	0.49
		Full Divided Light Grilles	0.26	0.29	0.49
	Low-E SmartSun™	Without Grilles	0.27	0.22	0.50
		Simulated Divided Light Grilles	0.27	0.20	0.45
		Finelight Grilles	0.27	0.20	0.45
		Finelight With Exterior Applied Grilles	0.27	0.20	0.45
		Full Divided Light Grilles	0.29	0.20	0.45
	Low-E SmartSun w/HeatLock	Without Grilles	0.23	0.21	0.49
		Simulated Divided Light Grilles	0.23	0.19	0.44
		Finelight Grilles	0.23	0.19	0.44
		Finelight With Exterior Applied Grilles	0.23	0.19	0.44
		Full Divided Light Grilles	0.25	0.19	0.44
	Low-E Sun	Without Grilles	0.28	0.20	0.31
		Simulated Divided Light Grilles	0.28	0.18	0.28
		Finelight Grilles	0.28	0.18	0.28
		Finelight With Exterior Applied Grilles	0.28	0.18	0.28
		Full Divided Light Grilles	0.30	0.18	0.28
	Low-E PassiveSun®	Without Grilles	0.28	0.54	0.61
		Simulated Divided Light Grilles	0.28	0.48	0.55
		Finelight Grilles	0.28	0.48	0.55
		Finelight With Exterior Applied Grilles	0.28	0.48	0.55
		Full Divided Light Grilles	0.30	0.48	0.55
	Clear Dual-Pane	Without Grilles	0.44	0.61	0.64
		Simulated Divided Light Grilles	0.44	0.55	0.57
		Finelight Grilles	0.44	0.55	0.57
		Finelight With Exterior Applied Grilles	0.44	0.55	0.57
		Full Divided Light Grilles	0.45	0.55	0.57
100 Series Transom Windows AND-N-83 3.0 mm glass	Low-E	Without Grilles	0.29	0.33	0.56
		Simulated Divided Light Grilles	0.29	0.30	0.50
		Finelight™ Grilles	0.29	0.30	0.50
		Finelight With Exterior Applied Grilles	0.29	0.30	0.50
		Full Divided Light Grilles	0.30	0.30	0.50
	Low-E w/HeatLock™	Without Grilles	0.25	0.32	0.55
		Simulated Divided Light Grilles	0.25	0.29	0.49
		Finelight Grilles	0.25	0.29	0.49
		Finelight With Exterior Applied Grilles	0.25	0.29	0.49
		Full Divided Light Grilles	0.27	0.29	0.49
	Low-E SmartSun™	Without Grilles	0.28	0.22	0.50
		Simulated Divided Light Grilles	0.28	0.20	0.45
		Finelight Grilles	0.28	0.20	0.45
		Finelight With Exterior Applied Grilles	0.28	0.20	0.45
		Full Divided Light Grilles	0.30	0.20	0.45
	Low-E SmartSun w/HeatLock	Without Grilles	0.24	0.21	0.49
		Simulated Divided Light Grilles	0.24	0.19	0.44
		Finelight Grilles	0.24	0.19	0.44
		Finelight With Exterior Applied Grilles	0.24	0.19	0.44
		Full Divided Light Grilles	0.27	0.19	0.44
	Low-E Sun	Without Grilles	0.30	0.20	0.31
		Simulated Divided Light Grilles	0.30	0.18	0.28
		Finelight Grilles	0.30	0.18	0.28
		Finelight With Exterior Applied Grilles	0.30	0.18	0.28
		Full Divided Light Grilles	0.31	0.18	0.28
	Low-E PassiveSun®	Without Grilles	0.30	0.54	0.61
		Simulated Divided Light Grilles	0.30	0.48	0.55
		Finelight Grilles	0.30	0.48	0.55
		Finelight With Exterior Applied Grilles	0.30	0.48	0.55
		Full Divided Light Grilles	0.31	0.48	0.55
	Clear Dual-Pane	Without Grilles	0.46	0.61	0.64
		Simulated Divided Light Grilles	0.46	0.55	0.57
		Finelight Grilles	0.46	0.55	0.57
		Finelight With Exterior Applied Grilles	0.46	0.55	0.57
		Full Divided Light Grilles	0.47	0.55	0.57

continued on next page

1) U-Factor defines the amount of heat loss through the total unit in BTU/hr-ft²-°F. The lower the value, the less heat is lost through the entire product. Window values represent non-tempered glass. Use of tempered glass can increase U-Factor ratings. See andersenwindows.com/nfrc for specific performance values. Door values represent tempered glass. 2) Solar Heat Gain Coefficient (SHGC) defines the fraction of solar radiation admitted through the glass directly transmitted, as well as absorbed and subsequently released inward. The lower the value, the less heat is transmitted through the product. 3) Visible Transmittance (VT) measures how much light comes through a product (glass and frame). The higher the value, from 0 to 1, the more daylight the product lets in over the product's total unit area. Visible Light Transmittance is measured over the 380 to 760 nanometer portion of the solar spectrum.

- NFRC ratings are based on modeling by a third-party agency as validated by an independent test lab in compliance with NFRC program and procedural requirements.
- This data is accurate as of January 2022. Due to ongoing product changes, updated test results, or new industry standards or requirements, this data may change over time.

Ratings are for sizes specified by NFRC for testing and certification. Ratings may vary depending on unit size, use of tempered glass, different grille options, glass for high altitudes, etc.

- Values are for single units with given pane thickness and 3/4" (19 mm) grilles for windows and 1" (25 mm) grilles for door products.

Andersen® NFRC Certified Total Unit Performance *(continued)*

For current performance information, please visit **andersenwindows.com**.

Andersen Product	High-Performance Dual-Pane Glass Type		U-Factor[1]	SHGC[2]	VT[3]
100 Series Gliding Patio Doors AND-N-100 3.1 mm glass	Low-E	Without Grilles	0.30	0.32	0.55
		Simulated Divided Light Grilles	0.30	0.25	0.42
		Finelight™ Grilles	0.30	0.29	0.48
		Finelight With Exterior Applied Grilles	0.30	0.29	0.48
		Full Divided Light Grilles	0.34	0.25	0.42
	Low-E w/HeatLock™	Without Grilles	0.26	0.32	0.54
		Simulated Divided Light Grilles	0.26	0.25	0.41
		Finelight Grilles	0.26	0.28	0.47
		Finelight With Exterior Applied Grilles	0.26	0.28	0.47
		Full Divided Light Grilles	0.32	0.25	0.41
	Low-E SmartSun™	Without Grilles	0.29	0.21	0.50
		Simulated Divided Light Grilles	0.29	0.17	0.38
		Finelight Grilles	0.29	0.19	0.44
		Finelight With Exterior Applied Grilles	0.29	0.19	0.44
		Full Divided Light Grilles	0.34	0.17	0.38
	Low-E SmartSun w/HeatLock	Without Grilles	0.25	0.21	0.49
		Simulated Divided Light Grilles	0.25	0.17	0.37
		Finelight Grilles	0.25	0.19	0.43
		Finelight With Exterior Applied Grilles	0.25	0.19	0.43
		Full Divided Light Grilles	0.31	0.17	0.37
	Low-E Sun	Without Grilles	0.30	0.20	0.31
		Simulated Divided Light Grilles	0.30	0.16	0.23
		Finelight Grilles	0.30	0.16	0.23
		Finelight With Exterior Applied Grilles	0.30	0.16	0.23
		Full Divided Light Grilles	0.34	0.16	0.23
	Low-E PassiveSun®	Without Grilles	0.31	0.53	0.61
		Simulated Divided Light Grilles	0.31	0.41	0.46
		Finelight Grilles	0.31	0.41	0.46
		Finelight With Exterior Applied Grilles	0.31	0.41	0.46
		Full Divided Light Grilles	0.37	0.41	0.46
	Clear Dual-Pane	Without Grilles	0.46	0.60	0.63
		Simulated Divided Light Grilles	0.46	0.46	0.48
		Finelight Grilles	0.46	0.53	0.55
		Finelight With Exterior Applied Grilles	0.46	0.53	0.55
		Full Divided Light Grilles	0.48	0.46	0.48
100 Series Patio Door Transoms AND-N-98 3.0 mm glass	Low-E	Without Grilles	0.32	0.25	0.43
		Simulated Divided Light Grilles	0.32	0.20	0.34
		Finelight™ Grilles	0.32	0.23	0.38
		Finelight With Exterior Applied Grilles	0.32	0.23	0.38
		Full Divided Light Grilles	0.34	0.20	0.34
	Low-E w/HeatLock™	Without Grilles	0.29	0.25	0.42
		Simulated Divided Light Grilles	0.29	0.20	0.33
		Finelight Grilles	0.29	0.22	0.37
		Finelight With Exterior Applied Grilles	0.29	0.22	0.37
		Full Divided Light Grilles	0.32	0.20	0.33
	Low-E SmartSun™	Without Grilles	0.31	0.17	0.38
		Simulated Divided Light Grilles	0.31	0.14	0.30
		Finelight Grilles	0.31	0.15	0.34
		Finelight With Exterior Applied Grilles	0.31	0.15	0.34
		Full Divided Light Grilles	0.34	0.14	0.30
	Low-E SmartSun w/HeatLock	Without Grilles	0.28	0.17	0.37
		Simulated Divided Light Grilles	0.28	0.14	0.30
		Finelight Grilles	0.28	0.15	0.33
		Finelight With Exterior Applied Grilles	0.28	0.15	0.33
		Full Divided Light Grilles	0.32	0.14	0.30
	Low-E Sun	Without Grilles	0.32	0.16	0.24
		Simulated Divided Light Grilles	0.32	0.13	0.19
		Finelight Grilles	0.32	0.13	0.19
		Finelight With Exterior Applied Grilles	0.32	0.13	0.19
		Full Divided Light Grilles	0.34	0.13	0.19
	Low-E PassiveSun®	Without Grilles	0.32	0.41	0.47
		Simulated Divided Light Grilles	0.32	0.33	0.37
		Finelight Grilles	0.32	0.33	0.37
		Finelight With Exterior Applied Grilles	0.32	0.33	0.37
		Full Divided Light Grilles	0.36	0.33	0.37
	Clear Dual-Pane	Without Grilles	0.45	0.47	0.49
		Simulated Divided Light Grilles	0.45	0.38	0.38
		Finelight Grilles	0.45	0.42	0.43
		Finelight With Exterior Applied Grilles	0.45	0.42	0.43
		Full Divided Light Grilles	0.45	0.38	0.38

Andersen Product	High-Performance Dual-Pane Glass Type		U-Factor[1]	SHGC[2]	VT[3]
100 Series Patio Door Sidelights AND-N-97 3.0 mm glass	Low-E	Without Grilles	0.31	0.25	0.42
		Simulated Divided Light Grilles	0.31	0.20	0.33
		Finelight™ Grilles	0.31	0.23	0.38
		Finelight With Exterior Applied Grilles	0.31	0.23	0.38
		Full Divided Light Grilles	0.34	0.20	0.33
	Low-E w/HeatLock™	Without Grilles	0.28	0.25	0.41
		Simulated Divided Light Grilles	0.28	0.20	0.33
		Finelight Grilles	0.28	0.22	0.37
		Finelight With Exterior Applied Grilles	0.28	0.22	0.37
		Full Divided Light Grilles	0.32	0.20	0.33
	Low-E SmartSun™	Without Grilles	0.31	0.17	0.38
		Simulated Divided Light Grilles	0.31	0.14	0.30
		Finelight Grilles	0.31	0.15	0.34
		Finelight With Exterior Applied Grilles	0.31	0.15	0.34
		Full Divided Light Grilles	0.34	0.14	0.30
	Low-E SmartSun w/HeatLock	Without Grilles	0.28	0.16	0.37
		Simulated Divided Light Grilles	0.28	0.14	0.29
		Finelight Grilles	0.28	0.15	0.33
		Finelight With Exterior Applied Grilles	0.28	0.15	0.33
		Full Divided Light Grilles	0.32	0.14	0.29
	Low-E Sun	Without Grilles	0.32	0.16	0.24
		Simulated Divided Light Grilles	0.32	0.13	0.19
		Finelight Grilles	0.32	0.13	0.19
		Finelight With Exterior Applied Grilles	0.32	0.13	0.19
		Full Divided Light Grilles	0.34	0.13	0.19
	Low-E PassiveSun®	Without Grilles	0.32	0.41	0.47
		Simulated Divided Light Grilles	0.32	0.33	0.37
		Finelight Grilles	0.32	0.33	0.37
		Finelight With Exterior Applied Grilles	0.32	0.33	0.37
		Full Divided Light Grilles	0.36	0.33	0.37
	Clear Dual-Pane	Without Grilles	0.44	0.47	0.49
		Simulated Divided Light Grilles	0.44	0.37	0.38
		Finelight Grilles	0.44	0.42	0.43
		Finelight With Exterior Applied Grilles	0.44	0.42	0.43
		Full Divided Light Grilles	0.45	0.37	0.38

1) U-Factor defines the amount of heat loss through the total unit in BTU/hr-ft^2-°F. The lower the value, the less heat is lost through the entire product. Window values represent non-tempered glass. Use of tempered glass can increase U-Factor ratings. See andersenwindows.com/nfrc for specific performance values. Door values represent tempered glass. 2) Solar Heat Gain Coefficient (SHGC) defines the fraction of solar radiation admitted through the glass directly transmitted, as well as absorbed and subsequently released inward. The lower the value, the less heat is transmitted through the product. 3) Visible Transmittance (VT) measures how much light comes through a product (glass and frame). The higher the value, from 0 to 1, the more daylight the product lets in over the product's total unit area. Visible Light Transmittance is measured over the 380 to 760 nanometer portion of the solar spectrum.

- NFRC ratings are based on modeling by a third-party agency as validated by an independent test lab in compliance with NFRC program and procedural requirements.
- This data is accurate as of January 2022. Due to ongoing product changes, updated test results, or new industry standards or requirements, this data may change over time. Ratings are for sizes specified by NFRC for testing and certification. Ratings may vary depending on unit size, use of tempered glass, different grille options, glass for high altitudes, etc.
- Values are for single units with given pane thickness and $^3/_4$" (19 mm) grilles for windows and 1" (25 mm) grilles for door products.

About the NFRC

The National Fenestration Rating Council (NFRC) is a nonpartisan coalition of professionals whose purpose is to provide fair, accurate and credible energy performance ratings for fenestration products. NFRC's membership includes manufacturers, suppliers, designers, specifiers, utility companies, government agencies and other building industry representatives.

Andersen Corporation is a founding member of the NFRC and continues to support its work by providing fair, accurate and credible energy performance ratings to consumers and the building industry. If you have any questions about the NFRC, its program or energy performance ratings, write them at: NFRC, 6305 Ivy Lane, Suite 410, Greenbelt, MD 20770. Phone: 301-589-1776 Website: **nfrc.org**

About the Label

Look for this certification label on every window and patio door you buy. The NFRC section was designed by the National Fenestration Rating Council to provide accurate information that helps you promote the energy efficiency of the homes you build. These ratings allow you – and your customers – to measure and compare the energy performance of similar products. If the product does not have this label, the NFRC has not verified its claims.

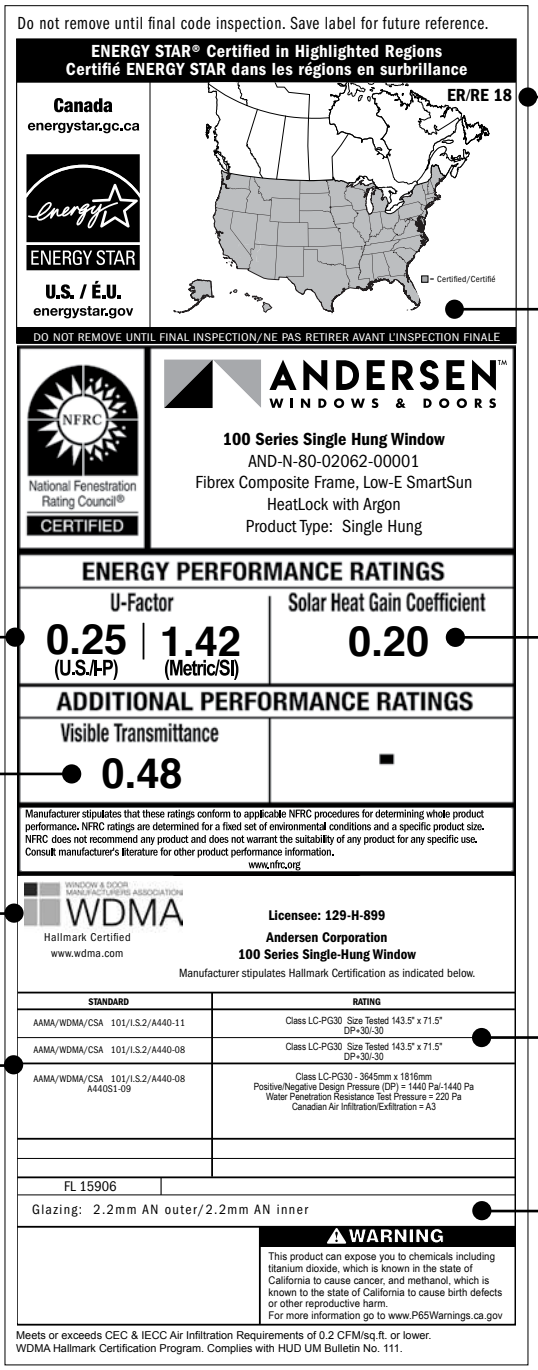

Energy Rating (ER) represents "Energy Rating" and is a rating used in Canada for product comparison purposes (the higher the ER number, the more energy saved during the heating season).

ENERGY STAR® Climate Zone Map is based on U-Factor and solar heat gain coefficient criteria for specific ENERGY STAR climate zones within the United States and Canada. The shading of the map shows which climate zone(s) a particular product and glass type is ENERGY STAR certified in.

U-Factor indicates how well a product prevents heat from escaping (the lower the number, the better).

Solar Heat Gain Coefficient measures how well a product blocks heat caused by sunlight (the lower the number, the more it will help reduce the use of air conditioning and as a result, reduce electrical bills and energy use).

Visible Transmittance refers to how much visible light comes through a product (the closer to 1.0, the more light is transmitted).

WDMA Hallmark Certification verifies the performance ratings of this product were tested by an independent testing laboratory and verified by a third-party certification program.

Test Standards

Performance Grade (PG) and **Design Pressure (DP) Ratings**

Glass Construction used with this product type.

• NFRC ratings are based on modeling by a third-party agency as validated by an independent test lab in compliance with NFRC program and procedural requirements.
• "ENERGY STAR" is a registered trademark of the U.S. Environmental Protection Agency.

INSTALLATION ACCESSORIES FOR WINDOWS & DOORS

Optional accessories are available for the installation of Andersen® windows and patio doors. Keep instruction guidelines and safety information in mind when considering the installation and use of any Andersen product. For questions, contact your local Andersen supplier.

FIBREX® TRIM BOARD

Available in white, canvas, prairie grass, Sandtone, Terratone, cocoa bean, dark bronze, red rock, forest green, dove gray and black, this solid cellular Fibrex trim board can be cut or ripped to size, and can be fastened using nails or screws. 3 ½" (89) x ¾" (19) thick in 10' (3048) lengths.

COLOR-MATCHED SEALANT

Color-matched sealant is available in Andersen exterior colors. This high-quality sealant can be used during the installation of all Andersen products.

VINYL CHANNELS

Rigid vinyl "J" and "h" channels are available in white, Sandtone and Terratone. "J" and "h" channels are ½" (13) deep and come in 150" (3810) lengths. "J" channels are ¾" (19) wide and "h" channels are 1" (25) wide. "H" channels are ¾" (19) deep and come in 84" (2134) and 150" (3810) lengths. White "H" channels are ¾" (19) wide. Sandtone and Terratone "H" channels are 1" (25) wide.

DRIP CAP

Heavy 24-gauge corrosion-resistant aluminum construction in two profiles to match frames. Available in white, canvas, Sandtone, Terratone, dark bronze, forest green and black in 6' (1829), 10' (3048) and 12'-7 ½" (3848) lengths.

AUXILIARY CASING

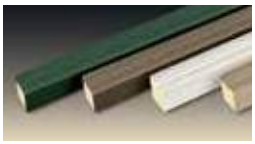

Made of cellular Fibrex material. Available in white, canvas, Sandtone, Terratone, dark bronze, forest green and black. 1 3/16" (30) x 1 3/16" (30) thick in 150" (3810) lengths.

COIL STOCK

Andersen aluminum coil stock can be ordered in white, canvas, prairie grass, Sandtone, Terratone, cocoa bean, dark bronze, red rock, forest green, dove gray and black. Made from .018" thick aluminum, coil stock is available in 24" (610) x 50' (15240) rolls. Color-matched 1 ¼" (32)-long stainless steel trim nails are also available and can be ordered in 1 lb/454 kg boxes.

INSTALLATION ACCESSORIES FOR INSERT WINDOWS

EXTERIOR SILL EXTENDER

A sill extender fits into the exterior accessory kerf in the window frame to hide the gap between the new insert window and the existing window frame at the sill. Precut to fit a 14° sill slope, it can be cut to fit other slopes as needed. Available in all exterior colors. Shown in white.

HEAD EXPANDER

A head expander assists in filling the opening at the top of the window when doing an interior installation. Available in white.

EXTERIOR FRAME EXTENDERS

Frame extenders fit into the exterior accessory kerf in the frame to hide the gap around the sides and/or head between the new insert window and the existing window frame. Extenders can be cut to length as needed. Available in all exterior colors. Shown in dark bronze.

Exterior frame and sill extenders are available in long lengths or can be ordered cut to approximate lengths for convenience at the job site.

Insert window shown with exterior frame extenders and sill extender in dark bronze.

COIL STOCK

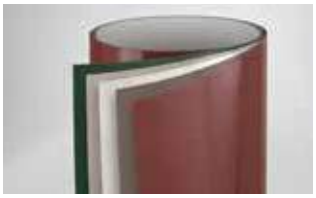

Coil stock fits into the exterior accessory kerf in the window frame, then wraps the existing wood window trim. It can be cut and formed to profiles at the job site. Andersen aluminum coil stock can be ordered white, canvas, prairie grass, Sandtone, Terratone, cocoa bean, dark bronze, red rock, forest green, dove gray and black. Made from .018" thick aluminum, coil stock is available in 24" (610) x 50' (15240) rolls. Color-matched 1 ¼" (32) stainless steel trim nails are also available and can be ordered in 1 lb/.454 kg boxes.

COLOR-MATCHED SEALANT

Color-matched sealant is available in Andersen exterior colors and is specially formulated to adhere to Andersen products.

FOAM BACKER ROD

Available for installations, ⅜" (10) backer rod helps provide an air seal around the frame. Available in 100' (30480) rolls.

SHIMS

Flat self-hanging shims help with a secure installation. Available in boxes of 248 shims.

INSTALLATION INFORMATION

ROUGH OPENINGS

The purpose of a rough opening is to allow for proper spacing between the window or patio door unit and the building structure. The space is required for locating, leveling and squaring the unit during installation and to provide an area for insulation. A rough opening that is incorrectly sized may affect unit operation and may not allow for adequate fastening of the unit to the building structure. Andersen rough opening dimensions are provided as a guideline to help determine the minimum amount of space needed between the window or patio door and the building structure. See appropriate product sections for rough opening guidelines for each product.

Keep in mind that rough opening dimensions may need to be altered from published guidelines, depending on installation methods, joining methods, replacement methods, etc. For example, flashing systems can reduce the amount of available rough opening space and should be factored in when calculating rough opening dimensions. The use of support or joining materials will encroach on the rough opening and may require additional rough opening space between the unit and the building structure, depending on the thickness of the flashing system and joining materials used. To facilitate drainage, the rough opening sill plate should never slope toward the interior. For challenging environments and other information, refer to EEBA's (Energy and Environmental Building Association) Water Management Guide (eeba.org).

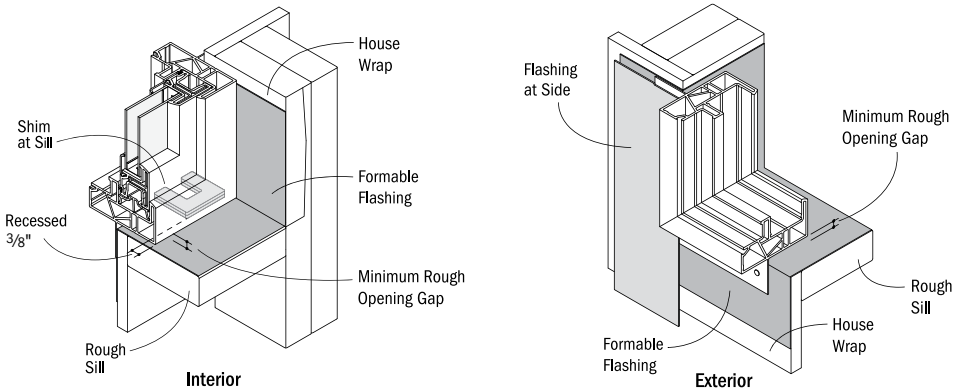

Example of window sill flashing in a membrane drainage system.

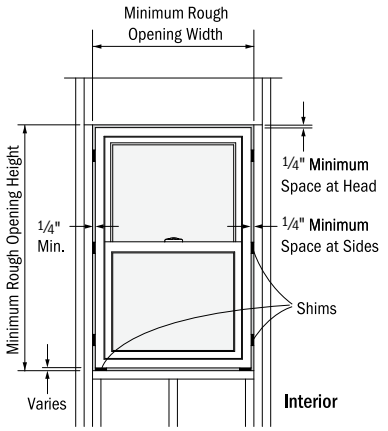

Example of window unit installed using Andersen published minimum rough opening dimensions.

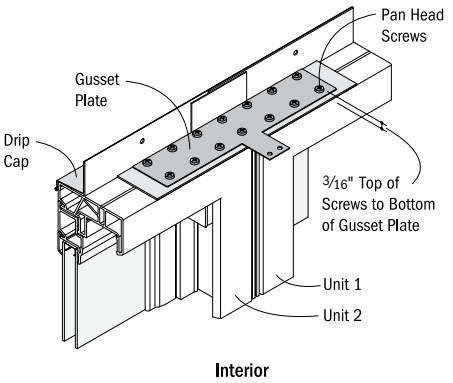

Example of two units joined together with the use of gusset plates and pan head screws that will require additional rough opening space.

IMPORTANCE OF PROPER INSTALLATION

Proper installation and maintenance of Andersen products is essential to attain optimum performance and operation. Installation instructions that provide guidelines for proper installation are typically provided with Andersen products. They are also available by visiting andersenwindows.com. Remember that every installation is different, and Andersen strongly recommends consultation with the local supplier or an experienced contractor, architect or structural engineer prior to the installation of any Andersen product. The method of attachment for Andersen products, fastener selection and code compliance is the responsibility of the architect, building owner, contractor, installer and/or consumer. For more complete installation details, visit andersenwindows.com or see your Andersen supplier.

GENERAL NOTES

When ordering, make certain you specify, then verify, the exact product, unit dimensions, configuration requirements, color and options you desire on each window or patio door. Before installing the product, we suggest you verify that it includes the features and options you ordered. Visit andersenwindows.com for product installation and joining guides. Printing limitations prohibit exact color replication of products. View actual samples for building specifications. Andersen Corporation reserves the right to change details, specifications or sizes without notice. The customer assumes all risk of alterations made to Andersen products.

CODES

Appropriate selection of Andersen® products that conform to all applicable laws, ordinances, building codes and safety requirements is the sole responsibility of the architect, designer, building owner and/or contractor. Check with your local building code officials for specific information. Unit wind load, performance grade and energy performance information is provided on pages 99-108. For up-to-date product performance information, visit **andersenwindows.com**. The performance of any building system depends on the design and construction of the building system in its entirety, which should meet building code requirements, as well as address product and material limitations, and local environment and climate.

DRIP CAPS

Drip caps are a specific type of flashing or trim used at the head of a window or door to direct water from the drainage plane out beyond the face of the unit.

FLASHING

Flashing is an important element in a building's water management system. It is used to shed and direct water to the building exterior or to the drainage plane. Flashing materials are typically applied starting from the bottom and working upward, with each successive layer overlapping the previous one in shingle fashion. Water infiltration problems in any type of building can be reduced by properly flashing and/or sealing around all building openings, including windows and doors.

USE OF SHIMS

Shims are used along the side jambs of windows and doors to center the unit in the rough opening and to position it plumb, level and square. In addition, shims are always required for windows under the sill at the side jambs to lift it off the rough opening sill plate. Shims also enable a straight frame for proper weatherstrip contact and unit operation. If not placed properly, unit performance and operation can be affected. Use waterproof shims capable of supporting the weight of the product. When using tapered shims, use them in pairs with the tapers opposing each other to avoid tilting the unit or twisting (rotating) of the jambs.

SEALANTS

Sealants are elastic materials used to block the passage of water and/or air while allowing movement between the two sides of the joint. A sealant should bond tightly, and be able to expand and contract to accommodate joint movement without cracking or tearing away from the substrate. Surfaces must be clean, dry and sound for adequate sealant adhesion. Choose a sealant that is compatible with, and that will adhere adequately to, all building materials used in the window and patio door area. Proper sealant joint design is based upon the expected movement of adjacent materials and the movement capability of the sealant. A general rule of thumb is that the depth of the sealant joint should be equal to half the width (D = W/2), but generally not less than ¼" (6) or more than ½" (13). Foam-plastic backer rod can be used to limit the depth of the sealant joint, to provide a backstop for tooling the sealant without damage to the bond. It also acts as a bond breaker to help minimize stress in the sealant. Sealants should be maintained seasonally, and repaired and/or replaced as needed.

GENERAL INSTALLATION GUIDELINES

1. Read and follow the installation guide in its entirety.
2. Decide whether you are integrating to a surface barrier or a membrane drainage system before installing the product. The appropriate method for your installation may vary based on building design, application and industry practices.
3. Make certain the drainage plane is continuous (proper overlaps to shed water, taped seams, etc.).
4. Andersen products should be installed only in the vertical position.
5. Check the rough opening to make sure it is sized properly, is square and is level.
6. Install the window or door plumb.
7. Install the window or door level.
8. Install the window or door square. Diagonal measurements should be within ⅛" (3).
9. Follow installation instructions to properly locate shims and to make sure that units are plumb, level and square. Shims are always required under the window jambs at the sill and along the jambs on the sides for windows and doors.
10. Check for squareness of unit before final anchoring of the product into the wall.
11. Anchor unit as directed with appropriate fasteners.
12. Integrate the window and door into the drainage plane of the wall using quality flashing and sealing materials. All flashing materials should be properly overlapped to shed water.
13. Allow ¼" (6) minimum space for a sealant joint around perimeter of unit between exterior finish materials and unit.
14. Insulate and seal the interior cavity between the window or door frame and the rough opening.
15. Check operation before application of interior trim.

EXTERIOR PAINTING/SEALING OF ANDERSEN® PRODUCTS

The exterior of some Andersen products may be painted or stained. However, improper painting and staining may cause damage to vinyl, aluminum and other exterior materials.

CAUTIONS

1. Do not apply any type of film to insulating glass. Thermal stress and glass damage can result. Andersen Corporation is not responsible for product performance when films are applied to Andersen products.
2. The use of removable insulating materials such as insulated window coverings, shutters and other shading devices may also cause thermal stress conditions and/or deformation of protective vinyl. In addition, excessive condensation may result, which can have a deteriorating effect on the window or door unit(s) involved. Andersen Corporation is not responsible for product performance when these kinds of materials or devices are applied to or used in conjunction with Andersen products.
3. In wall construction utilizing brick facades, leave adequate clearance between sill, jambs and brick for sealing and dimensional change of framework.
4. Acid solutions commonly used to wash brick and other masonry materials will damage glass, fasteners, hardware and metal flashing. Protect unit and follow cleaning product instructions carefully. Damage caused by acid solution is not covered under the Andersen limited warranty.
5. Andersen windows may be combined in almost unlimited ribbons or stacks if each unit is positively secured to structural elements on opposing sides and if the proper joining system is used. See page 99 for more information.

SAFETY GLASS

Unless specifically ordered, Andersen windows are not made with safety glass and, if broken, the glass could fragment, causing injury. Andersen windows may be ordered with tempered glass which may reduce the likelihood of injury when broken. All Andersen patio doors are made with tempered glass. Differences in appearance between tempered and non-tempered glass can be expected. Slight visual distortions may be noticeable and occur normally as a result of the tempering process. Building codes require safety glass in locations adjacent to or near doors and other locations.

WINDOW AND PATIO DOOR SAFETY

Windows may provide a secondary avenue of escape or rescue in an emergency, such as a fire. Every family should develop an escape plan and make sure family members know how to escape from the home in an emergency. In your plan, include two ways to escape from every room in case one way is blocked by fire or smoke, and make sure you have a designated meeting place outside. A window or a patio door is an alternate means of escape or rescue. Practice your plan until each member of the family understands it and is able to escape without assistance. Remember, you may not be able to reach children during a fire emergency. Teach children – even very young children – that they must escape from a fire in the home and never hide from the fire or from emergency personnel.

LOOKOUT FOR KIDS® PROGRAM

The Consumer Product Safety Commission has said: "Keep children away from open windows to prevent falls. Don't depend on insect screens to keep the child from falling out of the window. They are designed to keep insects out, not children in. Avoid placing furniture near windows to keep children from climbing to a window seat or sill." In an effort to educate consumers about the potential for child falls from windows, Andersen Corporation created the LookOut For Kids Program. It combines a window and door safety brochure and specific product instructions to help make window and door safety an important priority for consumers. For more information on child safety, write:

Andersen Corporation
LookOut For Kids Program
100 Fourth Avenue North
Bayport, MN 55003
Call **800-313-8889** or email
lofk@andersencorp.com

LOOK OUT! for kids®

Dimensions in parentheses are in millimeters.

Andersen® windows and patio doors can make significant contributions to the success of sustainable design strategies

As a charter member of the U.S. Green Building Council, we're active supporters of certified green buildings. Our products can help customers in pursuing green building programs, such as Leadership in Energy and Environmental Design (LEED®), the National Green Building Standard, Green Globes, GreenStar and more. Below is an overview of how our products may assist project teams with pursuing LEED v4 or the NAHB National Green Building Standard rating systems. More detailed credit summaries, as well as information about how Andersen products can support earlier versions of LEED certification (e.g., LEED v3 or LEED 2008), are available at **andersenwindows.com**.

LEED V4 FOR BUILDING DESIGN AND CONSTRUCTION: NEW CONSTRUCTION AND MAJOR RENOVATIONS

Integrative Process Credit:

Energy & Atmosphere

– Minimum energy performance prerequisite
– Optimize energy performance credit
– Renewable energy production credit
– Green power and carbon offsets credit

Materials & Resources

– Construction and demolition waste management planning credit
– Building product disclosure and optimization sourcing of raw materials credit
– Construction and demolition waste management credit

Indoor Environmental Quality

– Minimum indoor air quality performance prerequisite
– Minimum acoustic performance prerequisite – schools
– Enhanced indoor air quality strategies credit
– Low-emitting materials credit
– Thermal comfort credit
– Daylight credit
– Quality views credit
– Acoustic performance credit (option 2)

LEED V4 FOR BUILDING DESIGN AND CONSTRUCTION: HOMES AND MULTI-FAMILY MIDRISES

Energy & Atmosphere

– Minimum energy performance prerequisite
– Education of the homeowner, tenant or building prerequisite
– Annual energy use credit
– Building orientation for passive solar credit
– Air infiltration credit
– Windows credit

Materials & Resources

– Durability management prerequisite
– Environmentally preferable products credit
– Construction waste management credit

Indoor Environmental Quality

– Ventilation prerequisite
– Low-emitting products credit

ANSI ICC/ASHRAE 700-2015 NATIONAL GREEN BUILDING STANDARD

NGBS section numbers are referenced in parentheses.

Resource Efficiency

– Prefinished materials (601.7)
– Flashing (602.12)
– Exterior doors, including storm doors (602.1.10)
– Recycled construction materials (605.3)
– Bio-based products (606.1)
– Wood-based products (606.2)
– Manufacturer's environmental management system concepts (611.1)

Energy Efficiency

– Mandatory requirements (701.1)
– Building thermal envelope air sealing (701.4.3.1)
– Multi-family air leakage alternative (701.4.3.3)
– Fenestration air leakage (701.4.3.4)
– ICC IECC analysis (702.2.1)
– Energy performance analysis (702.2.2)
– UA improvement (703.2.1)
– Fenestration (703.2.5)
– Sun-tempered design (703.7.1)
– Passive cooling design (703.7.3)
– Passive solar heating design (703.7.4)

Indoor Environmental Quality

– Wood materials (901.4)
– Interior architectural coatings (901.9)
– Interior adhesives & sealants (901.9)
– Operable windows & sliding glass doors (902.1.5)

Energy Efficient

– Homeowner's manual (1001.1)
– Building construction manual (1002.1)

THE ENVIRONMENT HAS A BUSINESS PARTNER

Respect for the environment is nothing new at Andersen. For more than a century, it has been part of who we are. Our commitment to recycle and reclaim materials began simply because it was good business. Now it's part of our broader commitment to sustainability and responsible stewardship of all of our resources. Andersen is committed to providing you with long-lasting,* energy-efficient windows and patio doors. Visit **andersenwindows.com/sustainability** for more information.

Andersen® products are certified under the National Fenestration Rating Council (NFRC) voluntary third-party certification program designed to ensure accurate energy performance ratings and labeling.

The Window & Door Manufacturers Association (WDMA) Hallmark Certification program includes product testing and quality-control process audits to verify that Andersen windows and doors are produced in conformance with the industry standards for air, water resistance and structural performance.

Andersen Corporation is proud to be an ENERGY STAR® partner. For over 115 years, Andersen has built a reputation for environmental stewardship and energy-efficient products. In fact, Andersen has been part of the ENERGY STAR program since it started and was the first window manufacturer to be named an ENERGY STAR National Window Partner of the Year in 1999.

Andersen was the first window manufacturer to certify our products for indoor air quality, beginning in 2008. Our Indoor Advantage™ Gold certification by SCS Global Services (SCS) meets the rigorous high standards for healthier indoor air quality set by California Specification 01350.

Under U.S. Green Building Council (USGBC) guidelines, Andersen is able to claim a percentage of material in its Fibrex® product as pre-consumer recycled content. SCS Global Services (SCS) has certified this amount for Andersen.

*Visit andersenwindows.com/warranty for details.

All logos and marks are trademarks of their respective owners.

15 100 Series Window Overview
18 100 Series Casement & Awning Windows
30 100 Series Single-Hung Windows
52 100 Series Gliding Windows
66 100 Series Picture, Transom & Specialty Windows
84 100 Series Window Joining Details
88 100 Series Window Custom Sizes
91 100 Series Patio Door Overview
93 100 Series Gliding Patio Doors
95 100 Series Patio Door Sidelights & Transoms
97 100 Series Patio Door Joining Details
98 100 Series Patio Door Custom Sizes
99 Combination Designs, Product Performance & Installation

All trademarks where denoted are marks of their respective owners.
©2022 Andersen Corporation. All rights reserved. 02/22 Part #9045491

PDF NAVIGATION TIPS

Welcome to an overview of the enhanced navigation tools available in this PDF. Here are some simple tips on PDF navigation. Before you begin be sure you are using the latest version of **Adobe Acrobat Reader DC**, available at – **https://get.adobe.com/reader/**

To watch a 3-minute tutorial on navigating catalog PDFs, go to: https://youtu.be/sWWnYn60N3Y

BOOKMARK NAVIGATION

1

Acrobat will display the bookmarks panel when you open the PDF.

Bookmarks are the easiest way to find specific product information.

Select a topic and that page will be displayed.

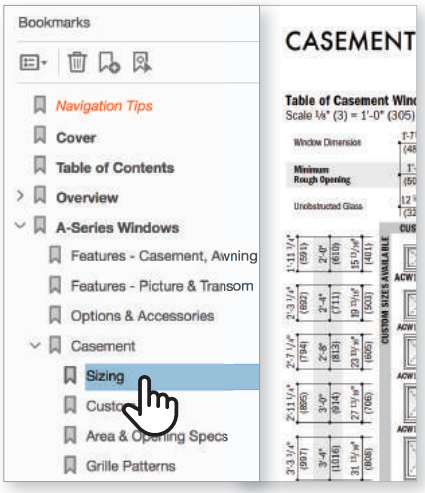

2

If you need to print a specific section, **right click on that section** within in the bookmarks panel and choose **"Print Section"**.

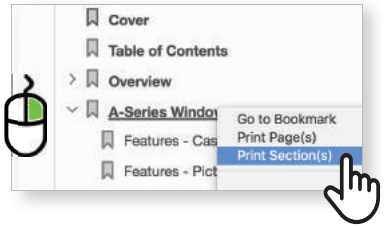

LINKS AND URL NAVIGATION

1

You can also use the **embedded links** to navigate between sections. All links are underlined in blue.

2

Website links automatically open in your web browser.

PDF NAVIGATION TIPS Cont.

Add additional navigation tools by adjusting the default settings in Acrobat.

TOOL BAR NAVIGATION

1

To add a **"Jump Back" Button** to your tool bar. **Right click on tool bar**, select **Show Page Navigation Tools** and choose **Show All Page Navigation Tools**.

Right and left facing arrows are added to the tool bar allowing you to go back or forward to the last page you viewed.

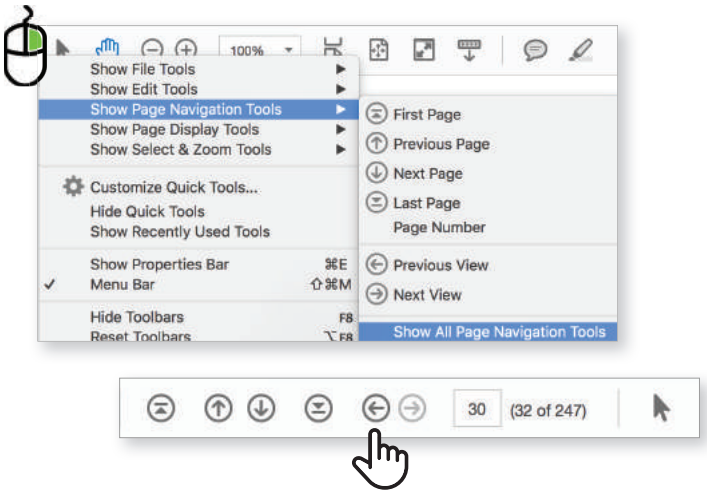

2

Another helpful tool is the **Loupe Tool**.

It allows you to zoom in on the page without having to increase the page size.

To add a **Loupe Tool** to your tool bar, **right click on tool bar**, select **Show Select & Zoom Tools** and then choose **Show All Select & Zoom Tools.**

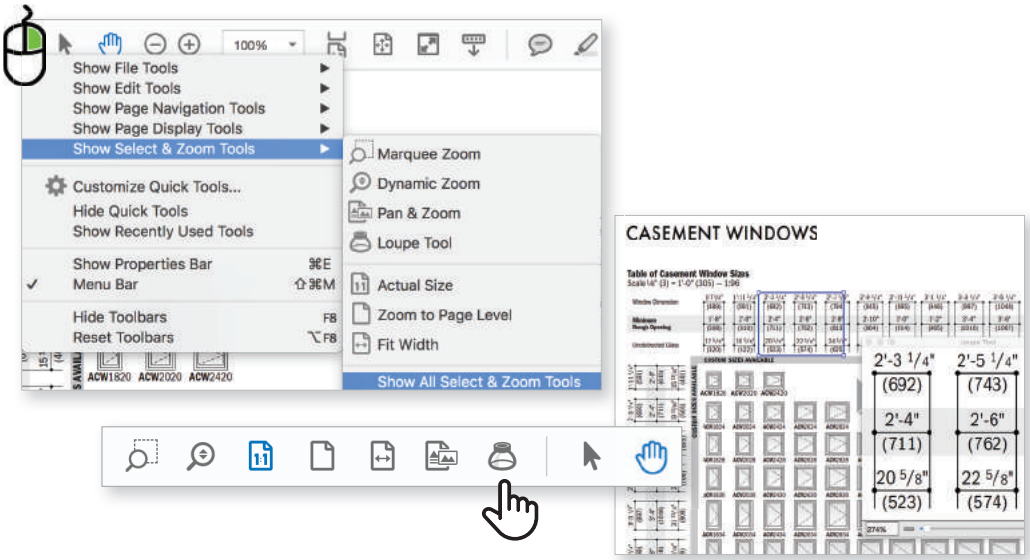

3

You can also use the **commenting tools**. Add a post-it note with your comments or highlight important information.

Be sure to save the file.

To watch a 3-minute tutorial on navigating catalog PDFs, go to: **https://youtu.be/sWWnYn60N3Y**

We are always looking for ways to improve.

Please send feedback to **webmarketing@andersencorp.com**.

MARVIN

CATALOG

ESSENTIAL

MARVIN ESSENTIAL™ COLLECTION

THE MARVIN PORTFOLIO

The Marvin portfolio consists of five product lines organized into three distinct collections defined by the degree of design detail and customization opportunities.

Marvin windows and doors offer exceptional performance, energy efficiency, low maintenance, and quality you can see, feel, and touch to help bring your vision to life.

	ULTIMATE Most extensive selection of features, options, and product types	MODERN Design flexibility in a purely modern aesthetic available exclusively at Marvin Modern dealers	COASTLINE Custom windows and doors for high velocity hurricane zones in the coastal Southeast	ELEVATE Wide range of options and product types	ESSENTIAL Curated options and product types
	MARVIN SIGNATURE® COLLECTION			MARVIN ELEVATE® COLLECTION	MARVIN ESSENTIAL™ COLLECTION
INTERIORS	WOOD 6 species options + custom 2 painted or primed options 6 stains + clear coat	EXTRUDED ALUMINUM 5 color options	EXTRUDED ALUMINUM 6 solid colors, 4 woodgrain finishes	WOOD Bare pine, painted Designer Black, painted White, or clear coat	FIBERGLASS 4 color options
EXTERIORS	EXTRUDED ALUMINUM 19 colors + custom OR WOOD 3 species + custom	FIBERGLASS 5 color options	EXTRUDED ALUMINUM 6 solid colors, 4 woodgrain finishes	FIBERGLASS 6 color options	FIBERGLASS 6 color options
SIZING	Standard + custom sizing for replacement, remodeling, or new construction	Custom sizing for remodeling or new construction	Custom sizing for replacement, remodeling, or new construction	Standard + custom sizing for replacement, remodeling, or new construction	Standard + custom sizing for replacement, remodeling, or new construction
HARDWARE	Extensive selection including Marvin Gallery Hardware	Minimalist hardware for modern design aesthetic	Available in multiple styles, sizes, and finishes to complement the window + door aesthetics	Available in 6 finish options with 2 door handle styles	Available in 6 finish options with 1 door handle style
COASTAL + WATERFRONT	Hurricane Impact Zones 3 and 4, + PG 50 Products		All products rated for High Velocity Hurricane Zone (IZ4)	Hurricane Impact Zone 3, + PG 50 Products	

Casement, Picture, and Awning windows in Ebony

Marvin Essential collection

DESIGN AND PERFORMANCE MADE EASIER

Characterized by clean lines, powerful performance, and streamlined options, the Marvin Essential collection makes it easier to achieve design and quality. The Essential collection features durable Ultrex® fiberglass interiors and exteriors, making it virtually maintenance free.

About Us

At Marvin, we're driven to imagine and create better ways of living, helping people feel happier and healthier inside their homes. We believe that our work isn't just about designing better windows and doors—it's about opening new possibilities for the people who use them.

Direct Glaze windows in Ebony

TABLE OF CONTENTS

5 MARVIN ESSENTIAL COLLECTION

8 WHY MATERIALS MATTER

10 ENERGY EFFICIENCY

12 DESIGNED WITH PROS IN MIND

14 WINDOWS + DOORS

16 CASEMENT + AWNING

18 SINGLE HUNG

20 DOUBLE HUNG

22 GLIDER

24 PICTURE

26 ROUND TOP + SPECIALTY SHAPES

28 SLIDING PATIO DOOR

30 PRODUCT OPTIONS

32 INSTALLATION ACCESSORIES

33 EXTERIOR TRIM

34 DESIGN OPTIONS

36 HARDWARE STYLES

WHY MATERIALS MATTER

THE MARVIN MATERIALS DIFFERENCE: ULTREX® FIBERGLASS

Choosing the right materials for windows and doors is important when it comes to long-term appearance and performance. Ultrex, an innovative fiberglass material pioneered by Marvin over 25 years ago, was one of the first premium composites on the market. However, not all composites are created equal.

Some companies use materials with fundamentally different properties and performance values to produce a composite material. Ultrex is different. High-density woven fibers bound by a thermally set resin makes Ultrex more resistant to pressure and temperature than vinyl-based composites. With such different materials grouped in the composites category, it is essential to know what sets them apart.

TEMPERATURES MAY FLUCTUATE, BUT ULTREX® FIBERGLASS WON'T

Ultrex expands and contracts at virtually the same rate as glass, so it works with glass rather than against it. This means seals aren't as prone to leaking, and windows aren't subjected to sagging issues like other composites.

This is especially true when compared to vinyl, which can distort in extreme heat and crack in fluctuating temperatures. Ultrex resists distortion even at temperatures up to 285°F. Rapid temperature change doesn't phase Ultrex. From -30°F to 70°F, a 6-foot stile changes less than 1⁄32 inch in length.

EXPANSION MEASUREMENT

Ultrex expands and contracts at virtually the same rate as glass.

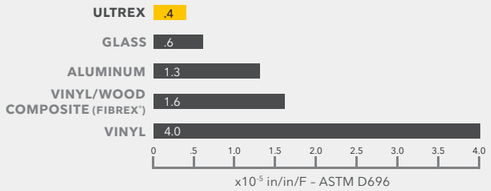

INDUSTRY'S BEST FIBERGLASS FINISH FOR LASTING BEAUTY

Ultrex is the first and only fiberglass finish to be verified to AAMA's 624 voluntary finish specifications for fiber-reinforced thermoset profiles (fiberglass).

Windows and doors made with Ultrex resist scratches, dings, and marring more than vinyl. Our proprietary, mechanically bonded acrylic finish is up to three times thicker than painted competitive finishes, and it resists UV degradation up to five times longer than vinyl—even on dark colors.

ACRYLIC CAP

STRENGTH AND STABILITY OF ULTREX

Ultrex pultruded fiberglass has a tensile strength 8x stronger than vinyl and 3x stronger than non-fiberglass vinyl/wood composites. Windows and doors made with Ultrex bend and flex less, resist cracking and separating, and stand up better to everyday wear and tear.

The exceptional strength and stability of Ultrex eases installation and establishes a secure, long-lasting fit that stays square and true year after year.

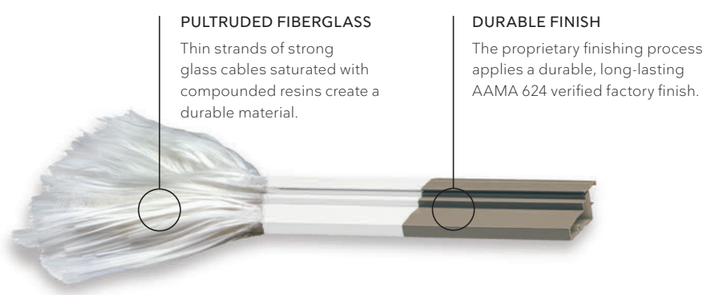

Double Hung windows in Stone White

COOLER IN SUMMER, WARMER IN WINTER

TOP RATED ENERGY EFFICIENCY

The National Fenestration Rating Council (NFRC) defines energy performance ratings for the entire window and door industry. It rates:

- **U-factor:** How well a window keeps heat inside a building.
- **Solar heat gain:** A window's ability to block warming caused by sunlight.
- **Visible light transmittance:** How much light gets through a product.
- **Air leakage:** Heat loss and gain by air infiltration through cracks in the window assembly.

Ultrex® fiberglass is 500 times less conductive than roll-form aluminum, similar to wood and PVC. It provides an insulated barrier against extreme weather temperatures, keeping homes comfortable and reducing heating and cooling costs.

ENERGY COST SAVINGS

Marvin was the first major window and door manufacturer to offer energy-efficient Low E2 glass and ENERGY STAR® certified performance on all of our standard windows and doors. Compared to non-certified products, ENERGY STAR certified windows and doors cut heating and cooling costs by 12%.*

The Essential collection offers Low E1, Low E2, Low E3, and Low E3/ERS insulated glass with argon gas, which has thermal conductivity 30% lower than that of air. It adds improved solar and thermal protection by distinguishing between visible light, damaging UV, and near-infrared rays to offer the ultimate glass performance. In addition, it provides a selection of energy-efficient solutions depending on your climate and needs.

LOW E GLASS COATING

The Low E coating is specially designed to take advantage of the angle of the winter and summer sun. Winter sun is absorbed and conducted indoors. Summer sun is filtered and reflected back outdoors.

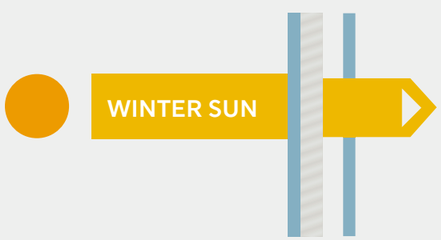

^ LOW E GLAZING

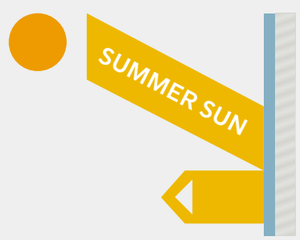

^ LOW E GLAZING

* ENERGY STAR® at energystar.gov

Double Hung windows in Stone White

A MORE COMFORTABLE INTERIOR, REGARDLESS OF THE SEASON

Keep heat inside during cooler weather and block the sun's rays during warmer weather with dual-pane windows and Low E coating.

DESIGNED WITH PROS IN MIND

PEACE OF MIND

Every project has its own unique requirements, and Marvin is equipped to meet those challenges. Our unique Ultrex® fiberglass construction, available factory services, unmatched delivery, and network of dedicated service and support personnel make the Essential collection the perfect choice—no matter the project.

EASY TO ORDER, SIMPLE TO INSTALL

The Essential collection offers simplified options to make the order process straightforward. Installation options and accessories make installing Marvin easier than ever. See page 18 for more information.

MARVIN HAS YOU COVERED

The Essential collection is backed by a fully transferable 20/10 warranty—20-year coverage on glass, and 10-year coverage on manufacturing materials and workmanship.

CREATING VALUE AND EFFICIENCY EVERY STEP OF THE WAY

Weather-tight, solid, and durable Ultrex® fiberglass means there are virtually no call-backs. Essential window and door profiles are optimized for the maximum in performance and fit.

Double Hung window in Stone White

Marvin Essential collection

WINDOWS + DOORS

Essential Casement and Direct Glaze windows in Ebony and Elevate Sliding French door in Designer Black

CASEMENT + AWNING

Casement windows in Ebony with Matte Black hardware

Awning and Picture windows in Ebony

CASEMENT + AWNING

- Multi-point sequential locking system provides superior PG40 performance rating with single lever operation.
- Stationary, operating, direct glaze rectangle and picture units available.
- Folding handle provides easy operation and neatly stows out of the way of window treatments and blinds.
- Casement available in standard and special sizes up to 3 feet wide by 7 feet high.
- Awning available in standard and special sizes up to 5 feet wide by 4 feet high.
- Coordinating Casement Picture window available up to 7 feet high and Casement Transom window available up to 6 feet wide by 2 feet high.
- Features an easy to remove screen with concealed fasteners.
- Crank out operation.

CASEMENT INTERIOR

AWNING INTERIOR

FOLDING HANDLE SHOWN IN OIL RUBBED BRONZE

SINGLE HUNG

Single Hung windows in Bronze

Essential Single Hung windows in Stone White

SINGLE HUNG

- Features a fixed top sash and a movable bottom sash for a traditional double hung look.
- Comes with a standard aluminum half screen; optional full screen is available.
- Lower sash lock provides a positive detent, reassuring user that the window is either locked or unlocked.
- Equal, Cottage, and Reverse Cottage sashes provide a variety of looks and checkrail heights.
- Up to PG50 performance rating.
- Factory, reinforced, and field-mulling kits available.
- Standard and special sizes up to 4 feet wide by 6 feet 6 inches high.
- Coordinating Picture and Transom windows available in sizes up to 5 feet wide by 6 feet high.
- The lower sash removes easily with no strings or cords to detach.

INTERIOR

EXTERIOR

COTTAGE AND REVERSE COTTAGE SASH RATIO

DOUBLE HUNG

Double Hung windows in Stone White

Double Hung windows in Stone White

DOUBLE HUNG

- Two movable sashes with versatility to create ventilation at the top, bottom, or both.
- Equipped with a standard full screen; optional half screen is available.
- Tilt latches are ergonomically designed and easy to operate, making tilting and cleaning effortless.
- Up to PG50 performance rating on a majority of sizes.
- Equal, Cottage, and Reverse Cottage sashes provide a variety of looks and checkrail heights.
- Factory, reinforced, and field-mulling kits available.
- Available in standard and special sizes up to 4 feet wide by 6 feet 6 inches high.
- Coordinating Picture and Direct Glaze Rectangle windows available in sizes up to 5 feet wide by 6 feet high.

INTERIOR

EXTERIOR

TILT MODE FOR EASY CLEANING

GLIDER

Glider window in Ebony

Glider and Picture windows in Ebony

GLIDER

- Perfect alternative to a swinging sash.
- Operating sash easily tilts and removes with no cords or strings to detach.
- Tilt latches are ergonomically designed and easy to operate, making tilting and cleaning effortless.
- Innovative screen design for easy installation and removal.
- Triple-sash option provides the appearance of a Picture window assembly.
- Available in dual-sash with left or right operating panel as well as triple-sash with fixed center panel and two operating end panels.
- PG25 performance rating on triple-sash and up to PG40 performance rating on dual-sash.
- Available in standard and special sizes up to 6 feet wide by 5 feet high for dual-sash and 8 feet wide by 5 feet high for triple-sash.

INTERIOR

EXTERIOR

GLIDER PULL SHOWN IN WHITE

PICTURE

Picture windows in Ebony

Picture windows in Ebony

PICTURE

- Fixed window available in either in-sash or direct glaze to meet various design needs.
- Direct glaze:
  - Glass meets the frame directly without a sash for a simple, clean profile with more glass area.
  - Available in sizes up to 9 ½ feet wide by 9 ½ feet high, not to exceed 49 square feet.
- In-sash:
  - Designed to match profiles of operable windows in the Essential collection.
  - Casement Picture window available in sizes up to 7 feet high
  - Double Hung Picture windows available in sizes up to 5 feet wide by 6 feet high.

INTERIOR

EXTERIOR

INTERIOR WINDOW PROFILE SHOWN IN STONE WHITE

ROUND TOP + SPECIALTY SHAPES

Round Top and Direct Glaze windows

ROUND TOP

- Constructed of a glass reinforced composite capped with proprietary acrylic finish.
- Complements Ultrex® fiberglass performance and radius profile.
- Available nailing fin, installation bracket, and through jamb installation.
- Perforated folding radius nailing fin provides for simple installation and proper water management.
- Available factory and field-mulling options.
- Standard and special sizes up to 8 feet wide and up to 7 feet high depending on the shape.
- Up to PG50 performance rating.

EXTERIOR + INTERIOR

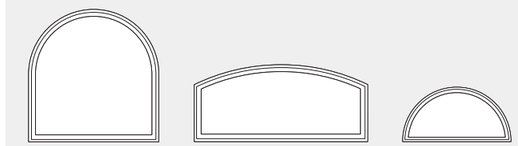

TRUE HALF ABOVE SPRINGLINE

EYEBROW ABOVE SPRINGLINE

HALF ROUND

SPECIALTY SHAPES

- Jambs are available factory applied or in an extension kit in 4 9⁄16 inch and 6 9⁄16 inch sizes.
- Consistent, fast delivery applies to even the most unique products.
- PG50 performance rating.
- Factory, reinforced, and field-mulling kits available.
- Available in sizes up to 49 square feet. Longest leg may not exceed 9 ½ feet.

INTERIOR PENTAGON

INTERIOR ISOSCELES TRIANGLE

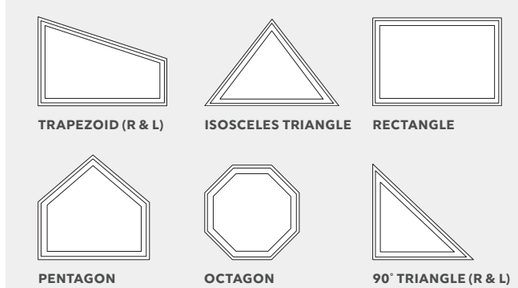

TRAPEZOID (R & L)

ISOSCELES TRIANGLE

RECTANGLE

PENTAGON

OCTAGON

90˚ TRIANGLE (R & L)

SLIDING PATIO DOOR

Essential Sliding Patio Door in Stone White with White Cambridge handle

Sliding Patio door in Ebony with Matte Black hardware

SLIDING PATIO DOOR

- A top hung sliding screen operates smoothly without jamming.
- Matching handle set design provides style and security.
- Optional slim handle provides 32-inch net clear opening on certain 2- and 3-panel configurations (see page 36).
- Up to PG30 performance rating.
- Doors come with standard tempered Low E2 insulated glass with argon gas. Optional Low E1, Low E3, and Low E3/ERS meet diverse energy-efficiency needs.
- Available in standard and special sizes up to 8 feet wide by 8 feet high for 2-panel configurations, and 9 feet wide by 8 feet high for 3-panel configurations.
- Coordinating Direct Glaze Rectangle windows available.

INTERIOR

EXTERIOR

SILL DETAIL SHOWN IN BRONZE

Marvin Essential collection

PRODUCT OPTIONS

Casement and Direct Glaze windows in Ebony

INSTALLATION MADE SIMPLE AND EFFICIENT

Marvin Essential windows and doors bring together design, quality, and performance in one streamlined collection. Essential products offer a number of installation options and accessories that make it easy to meet project demands.

NAILING FIN
Snaps out for easy installation.

JAMB EXTENSION
Allows for easy finishing with traditional molding and trim.

J-CHANNEL
Quickly and easily finishes the exterior.

SHEETROCK RETURN
Accommodates ½"–⅝" drywall installations.

3/4" RECEIVER
Works with thicker installation methods, including box jambs.

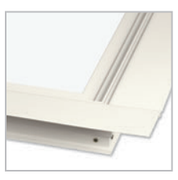

FRAME EXPANDER
Provides installation flexibility.

CASEMENT/AWNING 3" SASH LIMITER
Permanently limits sash movement for safety and security.

DOUBLE/SINGLE HUNG SASH LIMITER
Permanently limits sash movement for safety and security.

NON-OPERABLE LOCK
Renders sash inoperable.

GLIDER WOCD
Limits opening to 4" while providing for full egress. ASTM F2090-10 compliant.

CASEMENT WOCD
Limits opening to 4" while providing for full egress. ASTM F2090-10 compliant.

DOUBLE/SINGLE HUNG WOCD
Limits opening to 4" while providing for full egress. ASTM F2090-10 compliant.

EXTERIOR TRIM

Ultrex® Exterior Trim is offered with all rectangular Marvin Essential products in six exterior finishes. The durability, performance, and look of Essential collection windows and doors can be extended to the trim.

BRICK MOULD
2" Brick Mould is available with or without 2 ⅛" sill nosing.

FLAT
3 ½" Flat Trim is available in Flat and Flat Ranch configurations with or without 2 ⅛" sill nosing.

SILL NOSE
2 ⅛" Sill Nose provides authentic sill appearance.

CONNECTION BARB
Barb and receiver attachment method provides for quick, secure installation.

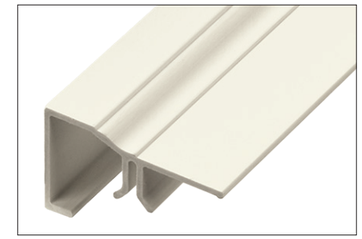

BRICK MOULD

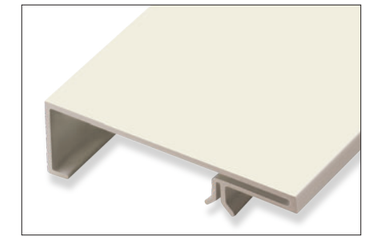

FLAT

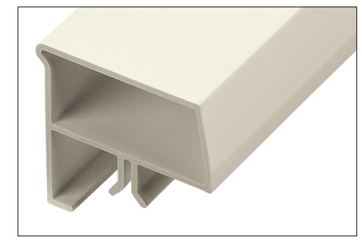

SILL NOSE

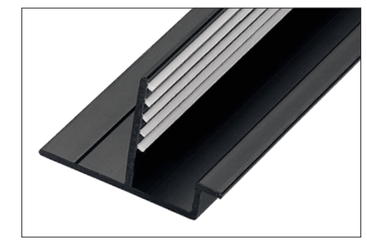

CONNECTION BARB

TRIM CONFIGURATIONS

Multiple configurations are available in lineal lengths and factory pre-cut kits in all six Essential collection exterior colors.

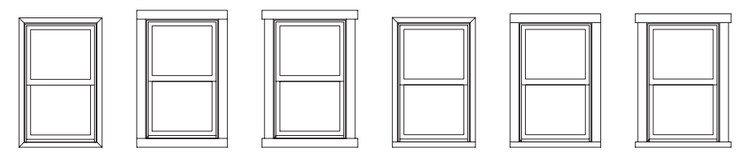

BRICK MOULD | FLAT | FLAT RANCH | BRICK MOULD WITH SILL NOSE | FLAT WITH SILL NOSE | FLAT RANCH WITH SILL NOSE

BRICK MOULD* | FLAT* | FLAT RANCH*

* Brick Mould, Flat, and Flat Ranch profiles are available on doors. Sill profiles are not included for door trim sets.

DESIGN OPTIONS

INTERIOR AND EXTERIOR FINISHES

Essential windows and doors have a durable, strong, and fully paintable Ultrex® fiberglass interior and exterior, featuring our AAMA-verified acrylic finish for low-maintenance and superior aesthetics.

FIBERGLASS INTERIOR COLORS

STONE WHITE
Available with your choice of exterior finish colors

BRONZE
Available when paired with Bronze exterior finish

GUNMETAL
Available when paired with Gunmetal exterior finish

EBONY
Available when paired with Ebony exterior finish

FIBERGLASS EXTERIOR COLORS

STONE WHITE

CASHMERE

PEBBLE GRAY

BRONZE

GUNMETAL

EBONY

DIVIDED LITES

GRILLES-BETWEEN-THE-GLASS (GBG)
Available in several popular lite cut options for a classic divided lite look and easy glass cleaning. Available in Stone White, Bronze, Gunmetal, or Ebony interior finish and Stone White, Cashmere, Pebble Gray, Bronze, Gunmetal, or Ebony exterior finish.*

GRILLES-BETWEEN-THE-GLASS SHOWN IN STONE WHITE

* Not available in polygons except direct glaze rectangles.

GLASS OPTIONS

Available in dual-pane in Low E1, Low E2, Low E3, and Low E3/ERS insulated glass with argon gas.*
Options include glazing for sound abatement (STC/OITC), high altitudes, and California fire zones.

DECORATIVE GLASS

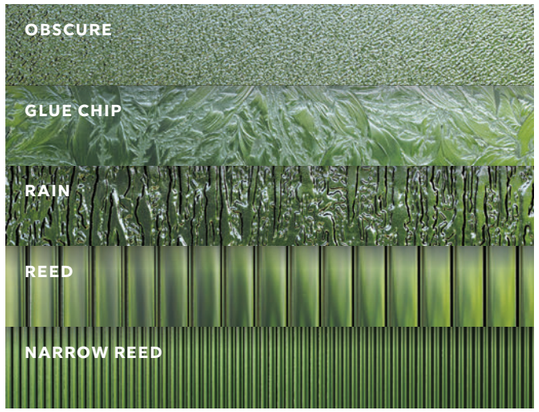

Casement window with Low E2 glass

* Argon gas not available in high elevations where capillary tubes are required.

HARDWARE STYLES

WINDOW HARDWARE

Windows feature classic low-profile, durable hardware for clean aesthetics, safety, and security.

SASH LOCK + KEEPER
Double Hung, Single Hung, and Glider

FOLDING HANDLE
Casement and Awning

DOOR HANDLE

Sliding Patio Doors feature classic profile durable hardware, a perfect blend of safety and security.

CAMBRIDGE

SLIM LINE EXTERIOR HANDLE

DOOR HANDLE OPTIONS

- Available keyed-alike option (use one key on multiple locks with up to 3 different keys on each project).
- Choose a distinct interior and exterior handle finish that matches or complements the interior and exterior color of your door.

Essential Direct Glaze windows in Ebony and Ultimate Sliding Patio door in Designer Black

FINISHES

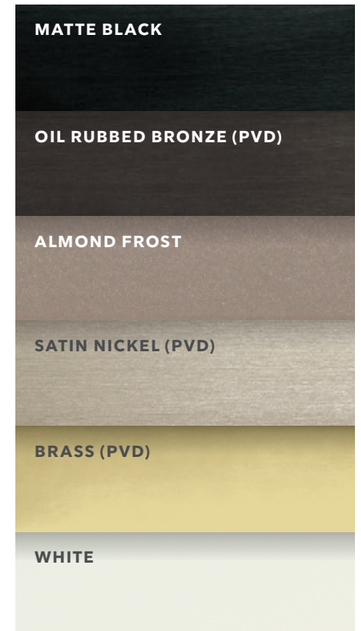

Double Hung window with Sash Lock and Sash Lift in Oil Rubbed Bronze

Choose from a variety of hardware finishes to complement your Essential collection windows and doors.

The Physical Vapor Deposition (PVD) process adds a layer of toughness to hardware exposed to environmental factors like direct sun and humidity. PVD finishes resist fading and discoloration, even in coastal areas. PVD has the highest grade corrosion resistant finish.

PVD finish is available on exterior door hardware in Oil Rubbed Bronze, Satin Nickel, and Brass.

Sliding Patio door with Cambridge hardware in Satin Nickel

THE MARVIN ESSENTIAL COLLECTION BRINGS TOGETHER DESIGN, QUALITY, AND PERFORMANCE IN ONE STREAMLINED OFFERING.

Strong, durable Ultrex® fiberglass exteriors and interiors are both striking and virtually maintenance free. Simplified options make the order process straightforward, while clean lines and versatile styles make it easy to meet project demands.

Direct Glaze windows in Ebony

Since 1912, Marvin has been a family-owned and -led company, with a legacy of innovation and commitment to the highest quality. We understand the unique opportunity windows and doors have to improve our spaces and how we feel in them. That's why we never stop pushing what's possible and inventing new solutions to channel fresh air, enhance light quality, and connect with the world around us.

MARVIN.COM

©2024 Marvin Lumber and Cedar Co., LLC. All rights reserved.
®Registered trademark of Marvin Lumber and Cedar Co., LLC.
ENERGY STAR® and the ENERGY STAR certification mark are registered US marks.

Cover Image: Essential Casement, Specialty Shapes, and Direct Glaze windows

Part #19981901. June 2024. [MUT]

Colors shown in printed materials are simulations and may not precisely duplicate product or finish colors. Contact your local Marvin dealer to view actual product and finish color samples.